Soil and Materials Engineers, Inc.

ACTIVITY-BASED AIR SAMPLING: ASBESTOS IN SOIL
Ohio Brownfields Conference

Presented By: Keith Egan

01/19/2011

INTRODUCTION

- **Today's discussion is a follow up *to Challenges in Setting a Soil Standard for Asbestos* presentation by Dr. Rish during the 2009 Ohio Brownfields Conference.**
- **The Issue: How to manage the risks from asbestos in soil at Brownfields?**

  - Building demolition or illegal asbestos burial can lead to asbestos in the soil.
  - No currently accepted soil standard for asbestos.
  - How do we make risk-based decisions concerning remediation?

STATE AND FEDERAL REQUIREMENTS

- No Federal Soil Standards other than TSCA.
- TSCA cut-off of 1% was based on analytical capabilities.
- EPA Region IX has noted 1% may pose an unacceptable risk in some situations.
- Only a few states have any guidance and none with a soil standard except non-detect or background.
- Other states only require “Proper Management” when disturbed.

PROBLEMS

- Exposure is driven by the inhalation pathway.
- Chemical soil standards rely on a dust emission and dispersion models to predict atmospheric concentrations in breathing zone based on soil concentration.
- The dust emission model is not applicable to asbestos; asbestos in soil varies in size and form.

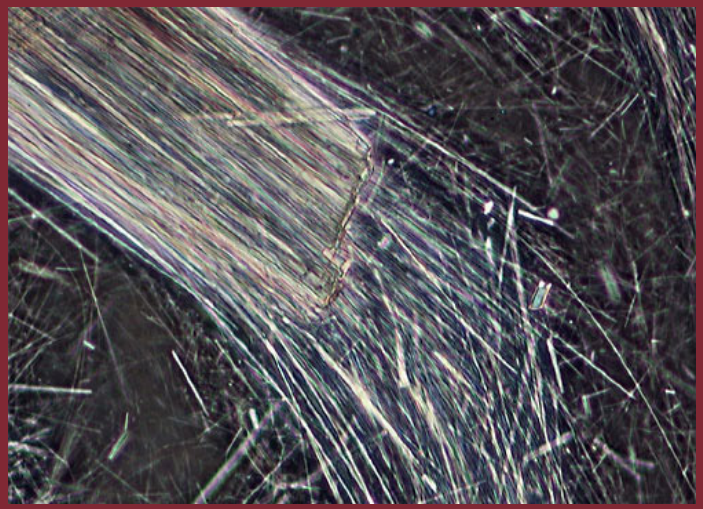

PROBLEMS

- **Suspended asbestos does not act the same way in atmosphere as soil particulates and the dispersion model is based on soil particulates.**

RELEASABLE ASBESTOS FIELD SAMPLER

- The Releasable Asbestos Field Sampler (RAFS) has been used to predict emissions.
- The RAFS is a enclosed mechanical rake where the emissions are carried by an airflow to an asbestos sampler.

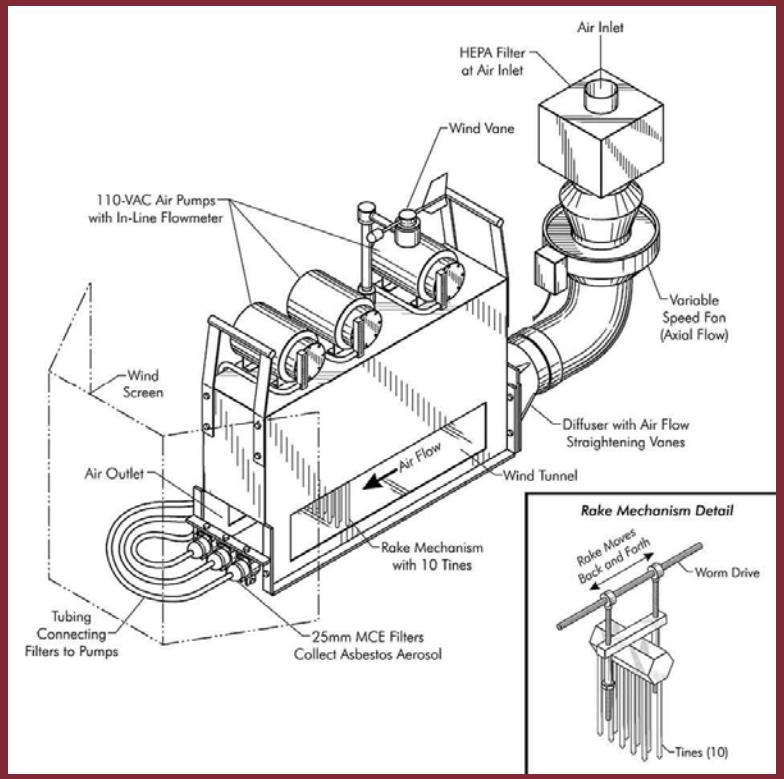

RELEASABLE ASBESTOS FIELD SAMPLER

- While the results correlate well to soil concentrations, the correlation is dependent on concentration, and matrix properties.
- Best correlation at low soil moisture (<10%).
- RAFS does not account for disturbance activity or environmental conditions (soil moisture, dispersion).
- Measures asbestos releasability and not asbestos exposure, does not provide a method to evaluate risk.

ACTIVITY BASED AIR SAMPLING

- Reproducing the future activities that will occur at the Property while measuring personal working outdoors and downwind, property line exposure.
- Used on Celotex Property when asbestos remediation of 21,000 cubic yards of buried asbestos waste still left Property with trace levels in point of compliance.
- Property be developed as a construction company and the rest for commercial or light industrial purposes.

ACTICITY BASED AIR SAMPLING

- Future receptors would include the following:
  - Employees who worked in the gravel covered lay down/storage yard.
  - Employees who occasionally visited the lay down/storage yard.
  - Landscapers who mow the grass that covered a portion of Property or otherwise performed landscaping activities.
  - Visitors or customers.
  - Construction workers developing the remainder of the Property.
  - Downwind, off-Property commercial and residential receptors on the adjoining properties.

SAMPLING

- **Sampling performed in each area of activity – currently developed Property and area of future development.**

SAMPLING

- In the currently developed Property, personnel air samplers were used on “landscapers” and stationary air samplers were installed within the lay down/storage yard, downwind of this area near parking lot, and at downwind property boundary.
- For the area of future construction, personnel air samplers were used on the “construction workers” and stationary samplers were installed at the downwind property boundary.

SAMPLING

- "Landscapers" performed typical activities, mowing, raking, and digging.
- "Construction workers" included operator in open cabs of excavators and laborers nearby. Operator would excavate then dump soil on the ground. Vehicles drove around area generating additional dust.
- Work performed when ground was dry and it had not rained for several weeks.
- Work performed during average wind conditions for Cincinnati.
- Work performed when wind direction would not disperse dust or asbestos to adjoining residential area.

SAMPLING

- All “landscapers” and “construction workers” were actually 40 hour HAZWOPER trained, Ohio Department of Health certified asbestos specialists and wore respirators during the work.

SAMPLING

SAMPLING

- Standard cassettes using 0.8 micron filters.
- Hi-volume personal air samplers capable of sampling 5 liters per minute.
- Also measured dust levels with a MiniRAM.
- Measure soil moisture levels with a field instrument and collected soil samples for soil moisture.
- Tracked weather conditions prior to and during sampling using hourly National Weather Service for local airport.

ANALYSIS

- First need to know what atmospheric concentration poses a risk to each receptor to determine detection limits needed.
- Once detection limits are know, the volume of air to be sampled can be determined and also the necessary flow rates.
- Work with your laboratory to determine your needs. Costs will be based on sample volumes and detection limits.

ANALYSIS – Detection Limit Calculation

Risk = Potency Factor * TWF * Concentration

Potency Factor is an Adjusted Inhalation Risk & TWF is Time Weighted Factor

Potency Factor					
Age at Onset (years)	Duration of Exposure				
	1	5	10	20	Lifetime
0	0.01	0.046	0.084	0.14	0.23*
10	0.007	0.031	0.058	0.094	0.148
20	0.005	0.021	0.038	0.063	0.093
30	0.003	0.014	0.025	0.042	0.056
50	0.001	0.006	0.01	0.014	0.015

* - Inhalation Risk Factor (Source: IRIS)

ANALYSIS – Detection Limit Calculation

$$TWF = \frac{\text{Exposure Time}}{24\text{ hours}} * \frac{\text{Exposure Frequency}}{365\text{ days}} * \frac{\text{Exposure Duration}}{70\text{ years}}$$

TWF				
Activity	Exposure Time (hrs/day)	Exposure Frequency (days/year)	Exposure Duration (years)	TWF
Property Worker - Lay down yard	8	250	25	0.082
Property Worker - Lay down yard visitor	2	250	25	0.020
Property Worker - Indoors	0.5	250	25	0.005
Visitor	0.5	30	25	0.001
Off-Property Adult	16	350	30	0.274
Off-Property Child	16	350	6	0.055

ANALYSIS – Detection Limit Calculation

Back calculate the concentration equal to 10^{-5} risk

$$\text{Concentration} = \frac{\text{Risk}}{\text{PF} * \text{TWF}}$$

10^{-5} Risk Concentration			
Activity	PF	TWF	Concentration (fibers/cc)
Property Worker - Lay down yard	0.056	0.082	0.0022
Property Worker - Lay down yard visitor	0.056	0.020	0.0088
Property Worker - Indoors	0.056	0.005	0.0350
Visitor	0.014	0.001	1.168
Off-Property Adult	0.093	0.274	0.0004
Off-Property Child	0.14	0.055	0.0013

ANALYSIS – Detection Limit Calculation

- Detection Limit should be less than 10^{-5} risk.
- Recommend at least half of risk-based value.
- Depends on the following:
  - Laboratory Capabilities
  - Sample Flow Rate
  - Sample Duration
- Recommend a duration of 6-9 hours for low detection limits. For visitors, indoor workers, etc. one to four hours may be sufficient.
- Flow rate approximately 5 liters/minute.

ANALYSIS – Sampling Requirements for LOD

- Analysis should be performed by Transmission Election Microscopy (TEM).
- NIOSH and AHERA Detection Limits vary. For the laboratory used:
  - At 1200 liter volume, NIOSH = 0.0008 f/cc, AHERA = 0.005 f/cc
  - At 2400 liters, NIOSH = 0.0004 f/cc, AHERA = 0.0038 cc/min
- Cost should be considered and per sample cost varies by sample volume. Approximate costs are:
  - 1200 liters, $1,000/sample
  - 2000 liters, $700/sample
  - 2800 liters, $500/sample

ANALYSIS – Sampling Requirements for LOD

- Adult worker in lay down yard with a 10^{-5} risk of 0.004 f/cc and LOD of 0.002 f/cc.
  - NIOSH around 600 liters needed
  - AHREA around 1200 liters.
- Cost decreases with increased volume.
- If collecting 1200 liters at 5 l/m, 4 hours of sampling required. Analysis cost ≈ $1200.
- Collecting an addition 4 hours could cut analysis cost to ≈ $600.
- What does 4 more hours of sampling cost for each sample?

ADDITIONAL INFORMATION - Celotex Property

- Conducted in October of 2009.
- Performed 80 hours after measurable precipitation event.
- Soil moisture 1.8 to 3.7% (for silty clay, <15% is arid or the wilting point)
- Wind speeds within Cincinnati annual average of 10 mph.
- Average temperature during sampling of 51°F vs. annual average of 52°F
- Average humidity during sampling of 57.8% vs. annual average of 71%.

ADDITIONAL INFORMATION – Celotex Property

- Sample volumes ranged from 500 L to 3000 L.
- Sample duration ranged from 4 to 8.5 hours.
- No asbestos detected in the samples, no risk to any receptors based on typical daily operations.
- Risk Mitigation Plan written and implemented to address soil below point-of-compliance.
- Made possible due to the assistance of Stephanie McChesney, Audrey Rush, and Carrie Rasik of the Ohio VAP.

SUMMARY

- Activity Based Air Sampling provides a site specific method to determine risks of asbestos in soil.
- Has been used by USEPA and in Ohio at a site receiving Covenant Not to Sue.
- Further information can be obtained by contacting me at (513) 319-8918 or egan@sme-usa.com