February 2010

Ohio Environmental Protection Agency

Division of Drinking and Ground Waters

Guidelines for Arsenic Removal Treatment for Small Public Drinking Water Systems

Ted Strickland, Governor
Lee Fisher, Lt. Governor
Chris Korleski, Director

Ohio Environmental Protection Agency
Division of Drinking and Ground Waters
P.O. Box 1049
Columbus, Ohio 43216-1049
www.epa.ohio.gov/ddagw

Ohio EPA is an Equal Opportunity Employer
Printed on Recyled Paper

FOREWORD

This publication has been prepared as a guide for professional engineers and water supply specialists engaged in the design or development of ***arsenic removal treatment for public water systems*** using only ground water. The objective of this publication is to ensure that new or substantially modified public water system facilities such as those for factories, schools, mobile home parks, office buildings, restaurants, condominiums, and the like will be capable of producing an adequate supply of potable water in compliance with the arsenic maximum contaminant level (MCL) of 0.010 mg/L.

Ohio Revised Code 6109.07 mandates that no person shall begin construction or installation of a public water system, or make a substantial change in a public water system, until plans therefore have been approved by the Director. The purpose of this manual is to outline the requirements and procedures necessary to develop an approved arsenic compliance strategy. This publication includes arsenic treatment design criteria for central treatment by oxidation/ filtration, adsorptive media, and anion exchange; and for point-of-use (POU) and point-of-entry (POE) treatment devices. Under certain circumstances, a pilot study may be required prior to detail plan submittal for the arsenic removal treatment system. Guidelines for conducting pilot studies using alternative filter media, adsorptive media, anion exchange and POU/POE devices are included in this manual.

Before any detail plans are submitted for review, Ohio EPA strongly recommends that the water system meet with Division of Drinking and Ground Waters (DDAGW) staff to discuss the appropriateness of using the proposed treatment strategy for arsenic removal at that site, and the need for a pilot study. If it is determined that a pilot study is needed, then a pilot study protocol must be acceptable to Ohio EPA and should be submitted for review prior to commencing the pilot study.

The design of treatment systems using surface water or ground water under the direct influence of surface water is beyond the scope of this manual. Refer to the latest edition of the Great Lakes-Upper Mississippi River Board of State and Provincial Public Health and Environmental Managers "Recommended Standards For Water Works", 2007 (RSWW) for design criteria.

The requirements, criteria and procedures described in this publication represent current practices of Ohio EPA and are subject to change when, in the judgment of the Agency, such a change will be more effective in fulfilling its responsibility under the law. Definitive statements which include such words as "shall", "needs to", "must", or "is necessary" indicate criteria which are requirements and must be addressed before Ohio EPA will issue plan approval for installation of treatment. Statements which include the words "should", "highly recommended" or "strongly encouraged" are recommendations from Ohio EPA to improve the reliability or performance of treatment and will not result in denial of plans if not provided or fulfilled.

TABLE OF CONTENTS

FOREWORD ii

LIST OF FIGURES v

LIST OF TABLES v

LIST OF APPENDICES v

TABLE OF ABBREVIATIONS vi

STATEMENT ON OTHER ARSENIC WATER TREATMENT PROCESSES vii

CHAPTER 1 DEFINITIONS

1.0 Public Water System (PWS) 1
1.1 Types of Public Water Systems 1
1.2 Point-of-Entry Treatment Device 2
1.3 Point-of-Use Treatment Device 2

CHAPTER 2 INTRODUCTION TO ARSENIC COMPLIANCE OPTIONS AND GENERAL TREATMENT DECISION CONSIDERATIONS

2.0 General 3
2.1 Compliance Options 3
2.2 Considerations When Choosing Treatment 5
2.3 Waste Disposal 6
2.4 Plan Submittal Requirements 7
2.5 Piloting 7
2.6 Operator Requirements 7
2.7 Engineer Requirements 7
2.8 Point of Use (POU) and Point of Entry (POE) Applicability 8
2.9 Full Scale Verification and Long Term Monitoring 8

CHAPTER 3 OXIDATION

3.0 General 9
3.1 Chlorine 11
3.2 Permanganate 12
3.3 Ozone 13
3.4 Solid Oxidizing Media 13

CHAPTER 4 OXIDATION/FILTRATION (CO-REMOVAL OF ARSENIC WITH IRON)

4.0 General 15
4.1 Optimal Water Quality Conditions for Oxidation/Filtration for Arsenic Removal 17
4.2 Treatment Methods 18
4.3 Filtration Standards for Arsenic Removal 19
4.4 Piloting for Filter Media Approval for Use in Rapid Rate Gravity or Pressure Filters 24

CHAPTER 5 ADSORPTIVE MEDIA PILOTING DESIGN AND CRITERIA

5.0 General 28
5.1 Background 28
5.2 Piloting -Guidelines for Obtaining Approval of Adsorptive Media Treatment Systems for Arsenic Removal 31
5.3 Adsorptive Media Minimum Specifications and Design Criteria 39

CHAPTER 6 ANION EXCHANGE PILOTING DESIGN AND CRITERIA

6.0 General 45
6.1 Background 45
6.2 Piloting Guidelines For Anion Exchange Resin Treatment Systems For Arsenic Removal 47
6.3 Anion Exchange Minimum Specifications and Design Criteria 55

CHAPTER 7 NON-CENTRALIZED TREATMENT: POINT-OF-USE AND POINT-OF-ENTRY TREATMENT DEVICES

7.0 General 60
7.1 Applicability 60
7.2 Requirements for POU/POE Drinking Water Treatment Units 61
7.3 Backflow Prevention for Non-Centralized Treatment Devices 70

CHAPTER 8 DISPOSAL OF ARSENIC RESIDUALS FROM DRINKING WATER TREATMENT PROCESSES

8.0 Waste Disposal Regulations 72
8.1 Types of Residual Wastes Generated 72
8.2 Liquid Waste Characterization and Waste Disposal Options 73
8.3 Waste Solid Residuals Characterization and Waste Disposal Options 77

REFERENCES 79

LIST OF FIGURES

4-1 Arsenic Treatment Strategy Selection Guide as a Function of Initial Arsenic and Iron Content of Water 16

LIST OF TABLES

2-1 Suggested Raw Water Quality Analyses for Treatment Selection…… 5
2-2 Types of Wastes Generated…….. 6
3-1 Comparison of Oxidants 10
4-1 Relative Effectiveness of Oxidants 17
5-1 Water Quality Interferences with Activated Alumina Adsorption..... 29
5-2 Minimum Recommended Adsorptive Media Pilot Study Parameters and Frequency for Analysis 37
5-3 Typical Process Conditions for Regeneration of Activated Alumina 44
6-1 Optimal Water Quality Conditions for Anion Exchange 47
6-2 List of Recommended Parameters and Sampling Frequencies for Target Regeneration Cycle Testing 53
7-1 Parameters of Concern Affecting POU/POE Treatment Systems 62
8-1 Summary of Residuals/Management Methods 72

LIST OF APPENDICES

- Appendix A: ATTEHSS Optimization Decision Trees 2a, 2b and 2c .. 81
- Appendix B: ATTEHSS Comparative Table of Arsenic Treatment Technologies 85
- Appendix C: ATTEHSS Oxidation Methods, Table 5-2..... 88
- Appendix D: U.S.EPA Design Manual for Adsorptive Media, Figure 3.5 Treatment Bed and Vessel Design Calculations 90
- Appendix E: U.S.EPA Design Manual for Adsorptive Media, Adsorptive Media Schematics 92
- Appendix F: U.S.EPA Design Manual for Ion Exchange, Ion Exchange Design Calculations and Schematics..... 96

TABLE OF ABBREVIATIONS

AA	Activated Alumina
ANSI	American National Standards Institute
ASME	American Society of Mechanical Engineers
ATTEHSS	Arsenic Treatment Technology Evaluation Handbook for Small Systems (USEPA)
AwwaRF	American Water Works Association Research Foundation
BAT	Best Available Technology
CCPP	Calcium Carbonate Precipitation Potential
CWA	Clean Water Act
CWS	Community Water System
DBP	Disinfection By-Product
DDAGW	Division of Drinking and Ground Waters
DO	Dissolved Oxygen
DSIWM	Division of Solid and Infectious Waste Management
DSW	Division of Surface Water
DHWM	Division of Hazardous Waste Management
EBCT	Empty Bed Contact Time
IBS	Iron Based Sorbents
IX	Anion Exchange
MCL	Maximum Contaminant Level
NPDES	National Pollutant Discharge Elimination System
NSF	National Sanitation Foundation
NTNC	Nontransient Noncommunity Water System
O&M	Operations and Maintenance
OAC	Ohio Administrative Code
ORC	Ohio Revised Code
POE	Point-of-Entry
POTW	Publicly Owned Treatment Works
POU	Point-of-Use
PTI	Permit-to-Install
PWS	Public Water System
RCRA	Resource Conservation and Recovery Act
RO	Reverse Osmosis
SBA	Strong-base anion exchange resin
SMCL	Secondary Maximum Contaminant Level
SSCT	Small System Compliance Technology
TBLL	Technically Based Local Limit
TC	Toxicity Characteristic
TCLP	Toxicity Characteristic Leachate Procedure
TDS	Total Dissolved Solids
RSWW	Recommended Standards for Water Works, 2007
TOC	Total Organic Carbon
TNC	Transient Noncommunity Water System
USEPA	United States Environmental Protection Agency
UV	Ultraviolet

STATEMENT ON OTHER ARSENIC WATER TREATMENT PROCESSES

This manual is intended to present design and piloting criteria for treatment options for arsenic removal appropriate to small ground water systems. Arsenic treatment options more suitable to larger public water systems based on cost effectiveness, such as coagulation filtration, enhanced lime softening, and enhanced coagulation filtration are not covered in this document. Design criteria for these treatment technologies can be found in RSWW.

Membrane filtration processes such as reverse osmosis and coagulation-assisted microfiltration and other emerging alternative treatment processes not covered in this publication may be acceptable for arsenic removal at public ground water systems if they are thoroughly tested as a pilot plant operated for a sufficient time to verify satisfactory performance, in accordance with RSWW Section 1.1.8.

High-rated ground water treatment plants may be acceptable on a case by case basis. It will be necessary to demonstrate by a pilot plant study acceptable to Ohio EPA that the desired water quality can be produced under varying raw water conditions and system flow demands.

For more information on pilot plant studies not addressed in this manual, contact Ohio EPA's Division of Drinking and Ground Waters, Central Office, or the appropriate District Office.

CHAPTER 1

DEFINITIONS

1.0 Public Water System (PWS)

A public water system provides piped water for human consumption through at least 15 service connections or serves at least 25 people at least 60 days a year; or is any water supply system serving an agricultural labor camp, as defined in Section 3733.41 of the Ohio Revised Code (ORC). Also see paragraph (XXX) of Rule 3745-81-01 of the Ohio Administrative Code (OAC) for the complete definition.

1.1 Types of Public Water Systems

1.1.1 Community water system (CWS): a public water system which serves at least fifteen service connections used by year-round residents or regularly serves at least twenty-five year-round residents.

Examples of a community water system include, but are not limited to; cities, villages, nursing homes, and mobile home parks.

1.1.2 Nontransient Noncommunity Water System (NTNC): a public water system that is not a community water system and that regularly serves at least twenty-five of the same persons at least six months per year.

Examples of a nontransient noncommunity water system include, but are not limited to, schools, day care centers, factories, and other places of employment.

1.1.3 Transient Noncommunity Water System (TNC): a noncommunity public water system that serves at least twenty-five persons per day for at least sixty days per year.

Examples of a transient noncommunity water system may include, but are not limited to, campgrounds, churches, restaurants, and rest areas.

1.1.4 Exempt Water System: means a water system that is exempt from Ohio EPA drinking water regulations (ORC Section 6109.02). In order to be exempt, <u>all</u> of the following conditions must be met:

1. Consists only of distribution and storage facilities and does not have any collection and treatment facilities;

2. Obtains all of its water from, but is not owned or operated by, a public water system;

3. Does not sell water to any person; and

4. Is not a carrier which conveys passengers in interstate commerce (e.g., airline, railroad, bus line, boat line, etc.)

1.2 Point-of-Entry Treatment Device (POE)

A treatment device applied to the drinking water entering a house or building for the purpose of reducing the contaminants in the drinking water distributed through all, or a portion of, the house or building.

1.3 Point-of-Use Treatment Device (POU)

A treatment device applied to a single tap used for the purpose of reducing contaminants in drinking water at that one tap.

CHAPTER 2

Introduction to Arsenic Compliance Options and General Treatment Decision Considerations

2.0 General

Effective January 1, 2006, the MCL for arsenic in drinking water is 0.010 mg/L. Compliance with the MCL is based on a running annual average. If at any time the calculated annual average arsenic concentration at a sampling point is 0.0105 mg/L or greater the water system will be in violation of the MCL and must notify the public and take steps to return to compliance.

2.1 Compliance Options

Public water systems which have finished water arsenic concentrations over the MCL have two basic options to consider for achieving compliance:

- Changing the water source/ partnering with other water systems
- Upgrading or installing a treatment technology

2.1.1 Changing the Water Source

1. New Source Considerations:
   Some public water systems may have a backup well with an acceptable water quality and sufficient quantity such that they could switch sources and abandon the high arsenic source.

   If the public water system has a piece of property with adequate isolation distances from pollution sources, drilling a new well on the property might be an option for arsenic compliance. Guidelines for developing an approved ground water source are contained in section 2.3 of the Guidelines for Design of Small Public Ground Water Systems (Ohio EPA 2010). This option should only be considered if there is good reason to believe that a sufficient amount of water with acceptable quality can be located.

2. Blending Considerations:
   If the system has more than two sources, they could explore the possibility of blending two or more water sources with low or no arsenic with their current high arsenic source in order to lower the finished water concentration below the MCL without treatment. Two low arsenic sources are necessary so that failure of one low arsenic well does not leave the

PWS with only one, high arsenic source of water in operation and no blending capabilities. The operations of the wells must ensure that the blended finished water arsenic will always be below 0.010 mg/L at the entry point.

3. Partnering With Other Water Systems
   A public water system with an emergency backup connection to another public water system that does not have elevated arsenic levels could explore the option of abandoning its wells and purchasing all of its drinking water from the other public water system.

   Systems without an existing connection to another public water system should evaluate the feasibility and cost of consolidating with a nearby system.

   If hauled water is practical, systems should consult the hauled water design requirements located in Appendix I of the Guidelines for Design of Small Public Ground Water Systems (Ohio EPA 2010).

2.1.2 Upgrading or Installing Treatment

1. Modification of Current Treatment Processes - A system should explore the possibility that the current treatment process might achieve a higher arsenic removal rate if modified. It should be determined if the current system has been optimized for maximum arsenic removal efficiency before deciding that a new technology is needed. See Appendix A for Arsenic Treatment Technology Evaluation Handbook for Small Systems (ATTEHSS) optimization decision Trees 2a, 2b, and 2c (USEPA 2003). Notify Ohio EPA of any treatment adjustments to determine if additional requirements (plan approval, lead and copper monitoring, etc.) will apply.

2. Installation of New Treatment - A comparative table of arsenic treatment technologies excerpted from ATTEHSS (USEPA 2003) is provided in Appendix B of this manual. In addition to factors listed in the table, the physical space needed for a particular treatment should be considered. Installation of any new centralized treatment or POE or POU treatment device will affect monitoring requirements for arsenic as well as for other contaminants.

Likely Small System Treatment Options

Oxidation/Filtration

Activated Alumina (AA) or other adsorptive media

Anion Exchange

POU/POE Devices for NTNCs

Note: See Appendixes A and B for treatment decision trees and comparisons.

2.2 Considerations When Choosing Treatment

2.2.1 Costs/Compliance with other Regulations - Cost will be a consideration regardless of what option is being examined. When choosing between several treatment options, a PWS should be aware of how their compliance with other regulations will be impacted by their choice, and how this adds or subtracts to the cost of choosing that treatment.

2.2.2 Raw Water Quality - A system cannot choose a treatment strategy without first having adequate information about the raw water characteristics of its sources. This will most likely require additional analyses than what has been collected for Ohio EPA compliance. This is a critical step in choosing a treatment system. For further information on how to use raw water quality results for the selection of a treatment option see ATTEHSS (USEPA 2003). Raw water considerations specific to each treatment option are discussed in Chapters 4, 5, 6 and 7 of this document. A list of laboratories certified by Ohio EPA is available at http://www.epa.ohio.gov/ddagw/labs.aspx.

Table 2-1 Suggested Raw Water Quality Analyses for Treatment Selection:

Key Parameters:	Other Parameters:
Arsenic (Speciate if possible)	Alkalinity
Chloride	Aluminum
Fluoride	Calcium
Iron	Magnesium
Manganese	Turbidity
Nitrate	Water Hardness
Nitrite	Vanadium
Orthophosphate	Temperature
pH	
Silica	
Sulfate	
TDS	
TOC	

Pretreatment Needs - Once a system has current information on the raw water quality of each source it can determine if pretreatment will be needed for effective arsenic removal. In particular, a pre-oxidation step to convert arsenic to the more easily removable oxidized state is needed before most arsenic treatment processes. See Chapter 3 for oxidant comparisons.

2.3 Waste Disposal

Public water systems employing treatment for arsenic removal must consider if the current waste disposal system will be adequate for the new or upgraded treatment system. Waste disposal permits may be affected. Hazardous waste may be generated with some treatment technologies. When considering ion exchange treatment in particular, the possibility of producing a hazardous brine waste should be considered. The public water system should contact the appropriate Ohio EPA Divisions to discuss waste management (Divisions of Surface Water, Hazardous Waste, and Solid and Infectious Waste).

Certain contaminants, when present in the raw water, may be removed or concentrated during the arsenic treatment process, thereby affecting waste disposal options because of Ohio EPA waste disposal requirements. These contaminants include: excessively high or low pH; high concentrations of ions which compete with arsenic for removal sites, such as fluoride, sodium, sulfate and chloride; high solids; high levels of heavy metals including arsenic, lead, chromium, and aluminum; and high concentrations of radionuclides.

Table 2-2 Types of Wastes Generated:

Treatment	Liquid Residuals	Solid Residuals
Adsorptive media without regeneration	Backwash & rinse water	Spent media
Reverse osmosis (POU/POE)	Reject concentrate Backwash water Supernatant	Spent membranes
Oxidation/filtration	Filter backwash Supernatant	Not applicable
Anion exchange	Backwash water Spent brine	Spent resin

A PWS must determine if any waste produced by a treatment system is hazardous. Under the Resource Conservation and Recovery Act (RCRA) a liquid waste containing more than 5.0 mg/L of arsenic would be classified as hazardous (by 2003 standards). For solid wastes, if the liquid extraction by the toxicity characteristic leaching procedure (TCLP) contains more than 5.0 mg/L arsenic, the waste is hazardous. When the United States Environmental Protection Agency (U.S. EPA) tested many solid waste streams generated by the best available technologies (BATs) for arsenic removal, the waste was found to be nonhazardous in regards to arsenic concentration. The PWS must be aware that their waste residual may have concentrated levels of co-occurring contaminants which may create disposal problems even when arsenic levels are nonhazardous. More information on waste disposal is contained in Chapter 8 of this manual.

2.4 Plan Submittal Requirements

According to Section 6109.07 of the Ohio Revised Code, no person shall begin construction or installation of a public water system, or make a substantial change in a public water system, until plans therefore have been approved by the Director of Ohio EPA. For more details, see OAC Chapter 3745-91 and Section 2.1 of the Guidelines for Design of Small Public Ground Water Systems (Ohio EPA 2010). Additional information can be found in *Ohio EPA Plan Review Procedures for Drinking Water Facilities*, which is available at http://www.epa.ohio.gov/portals/28/documents/engineering/PlanReviewProcedures.pdf.

2.5 Piloting

Emerging arsenic treatment technologies, new filter media and other technologies considered to be non-conventional in Ohio will require piloting for Ohio EPA approval until they are proven to be effective for arsenic removal in Ohio. Piloting will be required for centralized anion exchange, adsorptive media technology, and for any POU device until proven effective. The PWS or contractor should contact Ohio EPA to discuss a piloting protocol when serious consideration is being given to installing new treatment. Guidelines for each of these treatment approaches are provided in Chapters 5, 6, and 7 respectively. Public water systems considering these technologies may submit data from other studies conducted on raw water of similar quality to be considered in adjusting the details of the pilot protocol. When a pilot study is necessary, a qualified professional should submit the piloting protocol to Ohio EPA for acceptance before proceeding with the pilot study. A complete and thorough report of the results of the pilot study must be submitted to Ohio EPA. The PWS is encouraged to submit the results of the pilot study to Ohio EPA for acceptance prior to submitting the detail plans for the full scale system. Even when not required by Ohio EPA, a system may choose to pilot treatment changes before going full scale in order to properly design the system.

2.6 Operator Requirements

Systems installing treatment for an MCL will be required to be maintained by the operator of record with a certification from Ohio EPA equal (or higher) than the classification of the PWS. The classification of the PWS is determined according to OAC 3745-7-03 and may change as a result of changes in the treatment system. Each treatment option should be evaluated as to the level of operator training and expertise required, ease of use, safety considerations, etc. Any public water system using ground water treatment to remove any chemical contaminant with an MCL will require at least a Class I operator.

2.7 Engineer Requirements

In accordance with OAC 3745-91-03(B)(2), plans for the removal, inactivation or chemical treatment of a health based contaminant shall be prepared and issued in a manner consistent with Section 4733.14 of the Ohio Revised Code by a registered professional engineer.

2.8 Point-of-Use (POU) and Point-of-Entry (POE) Applicability

Nontransient Noncommunity systems can explore POU devices as an option for compliance for the arsenic rule. The number of devices required and the maintenance and monitoring costs should be compared to the costs of full scale treatment when evaluating whether non-centralized treatment is a viable option. Also, depending on the raw water quality, many POU devices will require pretreatment of the raw water, which will add to the cost. Treatment devices must be installed on all drinking water taps required by plumbing codes (such as a minimum number of drinking fountains), and any other tap commonly used for ingestion purposes. A list of all the requirements for POU devices is contained in OAC 3745-81-19.

Public water systems in Ohio with POU devices will have the same quarterly monitoring requirement as systems with centralized treatment. However, if a system has more than one POU unit, they may rotate which units are sampled each quarter. According to OAC 3745-81-19(B)(2)(c), at least 25 percent of the POU devices must be sampled each quarter and each unit's performance must be verified at least annually.

Public water systems should not assume that units they currently own will be approved for use by Ohio EPA. Detail plan approval will be required for any POU/POE arsenic treatment strategy, and all units must meet the minimum requirements stated in OAC 3745-81-19.

For a more detailed discussion of the use of POU/POE devices for compliance with the arsenic MCL, including piloting requirements, see Chapter 7 of this document.

2.9 Full Scale Verification and Long Term Monitoring

2.9.1 Treatment Verification

As part of the plan approval and director's plan approval letter, special conditions may be assigned to verify that the installed treatment is working satisfactorily to remove arsenic reliably and consistently below 0.010 mg/L in the finished water (i.e. additional monitoring of water quality and operational parameters).

2.9.2 Long Term Monitoring

Upon installation of treatment the system will be required to begin routine quarterly monitoring for arsenic at the entry point for compliance determination. Additional, more frequent operational monitoring may be required.

CHAPTER 3

OXIDATION

3.0 General

This section discusses the process of oxidizing arsenic prior to an arsenic removal process. Reduced inorganic arsenic, arsenite [As(III)], should be converted to the oxidized, pentavalent form arsenate [As(V)] to facilitate subsequent removal. This step is critical for achieving optimal performance of all unit processes described in this manual. Conversion to As(V) can be accomplished by providing an oxidizing agent at the head of any proposed arsenic removal process. Chlorine, permanganate, ozone, and solid phase oxidants are highly effective for this purpose. Aeration, chlorine dioxide and monochloramine are ineffective in oxidizing As(III). Ultraviolet (UV) light, by itself, is also ineffective.

In order for Ohio EPA to consider the design of a treatment system for arsenic removal without an arsenic oxidation component, Ohio EPA will require one or more of the following:

1. Arsenic speciation data from all raw water sources (e.g. seasonal data)

2. Documentation of the system's performance for removal of arsenite and arsenate

3. Results demonstrating adequate arsenic removal from a site specific pilot study of the technology without an arsenic oxidation component.

Table 3-1 provides a summary of the benefits and drawbacks associated with the use of several oxidation technologies. The choice of oxidation method should be based primarily on the arsenic treatment technology to be employed, and secondarily on factors provided in ATTEHSS's Table 5-2 (USEPA 2003), which can be found in Appendix C of this manual. Many small water systems employ chlorine disinfection, either alone or as part of a larger treatment process. In most of these instances, the existing chlorination process can be optimized to provide concurrent As(III) oxidation.

Table 3-1. Comparison of Oxidants[1]

Comparison of Oxidizing Agents		
Oxidant	**Benefits**	**Drawbacks**
Chlorine	• Low relative cost • Primary disinfection capabilities • Secondary disinfection residual • Oxidizes arsenic in less than one minute	• Formation of disinfection by-products • Membrane fouling • Special handling and storage requirements for gas chlorine
Permanganate	• Unreactive with membranes • No formation of disinfection by-products • Manganese dioxide media regenerant • Oxidizes arsenic in less than one minute	• Higher relative cost • No primary disinfection capability • Possible pink water if over fed • Difficulty in handling
Ozone	• No chemical storage or handling required • Primary disinfection capability • No chemical by-products left in water • Oxidizes arsenic in less than one minute in the absence of interfering reductants	• Formation of disinfection by-products • Sulfide and TOC interfere with conversion and increase the required contact time and ozone dose for oxidation • Relative high initial cost for equipment • Possible air permitting requirements
Solid Phase Oxidants	• No chemical storage or handling required • No chemical by-products left in water • Oxidizes arsenic with EBCT of 1.5 minutes in the absence of interfering reductants	• Backwashing required • Requires dissolved oxygen to work • No primary disinfection capabilities • Iron, manganese, sulfide and TOC increase the contact time and dissolved oxygen concentration required for oxidation.

1. USEPA (2003), Table 2-2

If centralized oxidation by permanganate, ozone, or solid oxidizing media is employed with POU treatment in the distribution system, and a secondary disinfectant residual is not maintained in the distribution system, anoxic conditions could develop in the distribution system causing the As(V) to reduce back to As(III). This would decrease the effectiveness of the POU devices and increase the cost of treatment.

3.1 Chlorine

3.1.1 Chemistry

Chlorine can be added either as a gas or as liquid hypochlorite, although chlorine gas may not be appropriate for small systems due to safety concerns. Chlorine generally will oxidize arsenic in less than one minute. The stoichiometric oxidant demand is 0.95 mg of chlorine (as Cl2 per mg of As(III). The ability of chlorine to convert As(III) to As(V) was found to be relatively independent of pH in the range 6.3 – 8.3. Careful consideration should be given to the chlorine dose estimate. Most waters contain substances other than As(III) that exert chlorine demand. In many cases, these substances compete for chlorine more aggressively than As(III). The stoichiometric oxidant demands for iron, manganese and hydrogen sulfide are 0.64 mg, 1.29 mg and 2.21 mg per mg of reductant respectively.

3.1.2 Compatibility with Downstream Treatment

Several arsenic removal processes, particularly membranes, are chlorine sensitive and/or intolerant. In these instances the utility should consider an alternate oxidant or alternate application points.

3.1.3 Safety

For new chlorine feed installations, the choice between using chlorine gas or liquid hypochlorite should be evaluated with respect to capital and operating costs, O&M requirements, code restrictions associated with chemical storage and handling, containment requirements, footprint, and operator safety concerns, among other issues. Ohio EPA generally recommends small to medium sized systems utilize liquid hypochlorite due to safety concerns associated with gas chlorine. Information on the design of a chlorination application system can be found in Part 5.0 of RSWW. The standard design will be similar to chlorine or hypochlorite feed systems installed for disinfection purposes.

3.1.4 Disinfection By-Product (DBP) Formation

DBPs form when disinfectants such as chlorine, chlorine dioxide or ozone react with naturally occurring organic substances in the raw water. For systems not currently chlorinating, either for disinfection or oxidation purposes, the addition of chlorine at any point in the treatment process will trigger the requirement to monitor for disinfection by-products. For systems currently using chlorine, monitoring requirements for disinfection by-products will not change.

3.2 Permanganate

3.2.1 Chemistry

Permanganate is a powerful oxidizing agent that is commonly used in iron and manganese removal processes. Potassium permanganate exists in solid, granular form and is readily soluble in water. Sodium permanganate is available in liquid form, and although the relative cost is higher than solid forms, they are easier to handle. Most applications involve metering of a permanganate solution.

3.2.2 Permanganate Dose Estimate

Several factors need to be considered when estimating permanganate dose. Most waters contain substances other than As (III) that exert oxidant demand. Permanganate reacts aggressively with organic material, and permanganate can be consumed during the regeneration of the manganese dioxide media. The stoichiometric oxidant demand is 1.06 mg of permanganate per mg of As(III). The ability of permanganate to convert As(III) to As(V) was found to be relatively independent of pH in the range 6.3 – 8.3. The stoichiometric oxidant demands and the oxidation-reduction reactions for permanganate to oxidize iron, manganese, and sulfide are 0.71 mg, 1.44 mg and 2.48 mg per mg of reductant respectively. The ultimate permanganate demand is the sum of all of these factors, and the applied dose will be larger than the stoichiometrically calculated permanganate demand, and must be field verified.

3.2.3 Application

Permanganate is generally used in conjunction with a filtration process for the removal of iron and manganese. If permanganate is the sole oxidant used prior to filtration, then continuous feed of permanganate will be required for arsenic treatment. Concurrent As(III) oxidation and removal is possible with iron and manganese and is discussed in more detail in Chapter 4 of this document.

Information on the design of a chemical application system can be found in Part 5.0 of the RSWW. The standard design will be similar to permanganate feed systems installed for the oxidation of iron and manganese.

Since permanganate does not provide a secondary disinfectant, another oxidant may be required for secondary disinfection and to prevent anoxic conditions from developing in the distribution system where POU devices are located.

3.3 Ozone

3.3.1 Chemistry

Ozone is the most powerful and rapid-acting oxidant available. It is created by exposing oxygen, either in air or pure oxygen, to high energy such as an electric discharge field (i.e.,corona discharge) or to UV radiation. This causes the oxygen molecules to react to form an unstable configuration of three oxygen atoms – the typical oxygen molecule contains only two.

3.3.2 Ozone Dose Estimate

Most waters contain substances other than As (III) that exert oxidant demand. The stoichiometric oxidant demand is 0.64 mg of ozone per mg of As(III). The ability of ozone to convert As(III) to As(V) was found to be relatively independent of pH in the range 6.3 – 8.3. The stoichiometric oxidant demands and the oxidation-reduction reactions for ozone to oxidize iron, manganese, and sulfide are 0.43 mg, 0.88 mg and 1.5 mg per mg of reductant respectively. Ozone will also react with TOC. The ultimate ozone demand is a sum of all these factors and the applied dose may be larger than the calculated ozone demand and must be field verified.

3.3.3 Application

Because of its instability, ozone is very reactive and is a very efficient oxidant. The only by-product from oxidation with ozone is oxygen, which is dissolved in aqueous systems. But because of ozone's highly reactive nature, it will quickly self-react and revert back to oxygen if in high concentrations or not used within short periods of time. Therefore, if ozone is used as an oxidant, it must be produced on site. Since ozone does not provide a secondary disinfectant residual, another oxidant may be required for secondary disinfection to prevent anoxic conditions from developing in the distribution system where POU devices are located. Information on the design of an ozonation system can be found in Section 4.3.7 in RSWW.

3.4 Solid Oxidizing Media

Solid oxidizing media are generally granular formulations containing manganese dioxide and are typically used to remove iron and manganese from drinking water. However, some types of granular manganese dioxide media have also been shown to effectively catalyze the oxidation of As(III) to As(V) using dissolved oxygen. One such media is Pyrolusite which is a common name for naturally occurring manganese dioxide distributed under brand names such as Filox-R and Pyrolox.

Solid oxidizing media that do have the capacity to oxidize arsenic are susceptible to reductions in their capacity when loaded with excessive iron or manganese or other interfering reductants such as hydrogen sulfide and total organic carbon. Generally, a sufficient dissolved oxygen (DO) concentration is needed to enhance the oxidizing capacity of these media for arsenic oxidation. Therefore, the use of solid oxidizing media as a means to convert arsenite to arsenate is not appropriate when iron and manganese concentrations are elevated. Other means of oxidation should be considered in these cases. More information on the effects of DO and interfering reductants can be found in "Laboratory Study on the Oxidation of Arsenic III to Arsenic V" (Ganesh and Clifford 2001) .

One drawback to the use of a solid phase oxidant is that the solid phase oxidant is not recognized as a disinfectant, and another oxidant may be required for disinfection. Solid oxidant media generally require regular backwashing which generates a liquid waste that must be properly disposed. Additionally, if a secondary disinfectant is not used in the distribution system when a POU treatment strategy is implemented, anoxic conditions could develop in the distribution system causing the As(V) to reduce back to As(III). This would decrease the effectiveness of the POU devices and increase the cost of the treatment.

For most ground water sources, the dissolved oxygen content will be very low. Oxygen may need to be added depending upon the concentrations of interfering reductants. An alternative to adding oxygen is to increase the empty-bed contact time (EBCT) to overcome the interfering reductants. If oxygen addition is selected, it can be done by injecting air into the water stream using a venturi air injector or other approved aeration method. The oxygenated water then flows downward through a column of granular manganese dioxide media.

The EBCT is the other important design criteria for a solid-phase oxidant system. Generally 1.5 to 6 minutes is accepted EBCT based on interfering reductants, DO concentrations and other factors. Tests should be run on water to be treated to determine the actual required EBCT.

Typical hydraulic loading rates for granular manganese dioxide media systems for oxidation purposes only are 10 to 20 gpm/ft^2. Public water systems can follow manufacturers' recommendations for design for oxidation. Verification that adequate oxidation is occurring can be done through water testing with arsenic speciation. If a public water system intends to use solid oxidizing media for filtration, additional design requirements will apply (see Chapter 4 section 4.3.5) and the public water system should consult with Ohio EPA. Filter media must meet RSWW or be piloted (see Chapter 4 section 4.4 of this document).

CHAPTER 4

OXIDATION/FILTRATION (CO-REMOVAL OF ARSENIC WITH IRON)

4.0 General

Many arsenic-containing ground waters also contain significant levels of iron and manganese due to natural geochemistry. Like arsenic, iron has two primary valences; Fe(II) (ferrous iron) and Fe(III) (ferric iron). Manganese has many valences of Mn(II), Mn(III), Mn(IV), Mn(VI) and Mn(VII). The reduced forms of both elements; Fe(II) and Mn(II) (manganous manganese) are soluble. When oxidized, both elements are converted to insoluble forms and can cause serious aesthetic problems in drinking water. Because of their potential aesthetic problems, a secondary maximum contaminant level (SMCL) has been established by U.S. EPA (1979) for iron (0.3 mg/L) and manganese (0.05 mg/L). In addition, OAC 3745-91-09 requires new community water systems and existing community water systems, which develop a new source, or change a source, to provide treatment to comply with SMCLs for iron and manganese. Removing iron and manganese levels to below their SMCLs eliminates many of the taste, odor and color problems caused by their high concentrations.

Iron and manganese can be removed from ground water by several technologies. The traditional removal method for both elements from ground water normally involves a two step process; (1) oxidation of the soluble forms to the common insoluble forms of $Fe(OH)_{3(s)}$ and $Mn(O)_{2(s)}$ and, (2) filtration of these precipitates.

Iron removal can be used to reduce arsenic by taking advantage of the arsenic adsorptive capacity of natural iron particulates that are produced following the oxidation of Fe(II). Arsenic removal is achieved through two primary mechanisms: adsorption and co-precipitation. Adsorption involves the attachment of arsenic to the surface of Fe(III) particles, where co-precipitation involves adsorption and entrapment of arsenic within Fe(III) particles by inclusion, occlusion, or adsorption.

The capacity to remove arsenic and potential to meet the new arsenic MCL during removal depends largely on the amount of arsenic and natural iron in the source water. Sorg (2002) proposed an arsenic treatment strategy selection screening guide which is derived from the prediction that source water possessing a 20:1 iron to arsenic ratio should have the arsenic reduced to below the MCL by removing the iron. Thus, source waters having an iron to arsenic ratio of 20:1 or greater are potential candidates for arsenic removal via iron removal. Converting this ratio into a removal guide indicates that 1 mg/L iron should be capable of removing 0.05 mg/L arsenic; this removal capacity being achieved under *optimum* adsorptive and process operational conditions. The following graph is of Figure 2.2 from U.S. EPA's Design Manual: Removal of Arsenic from Drinking Water Supplies by Iron Removal Processes (Hoffman 2006) which illustrates when the iron to arsenic ratio supports co-removal with iron through filtration:

Figure 4-1. Arsenic Treatment Strategy Selection Guide as a Function of Initial Arsenic and Iron Content of Water. Based on *optimized* arsenic removal as As V. [1]

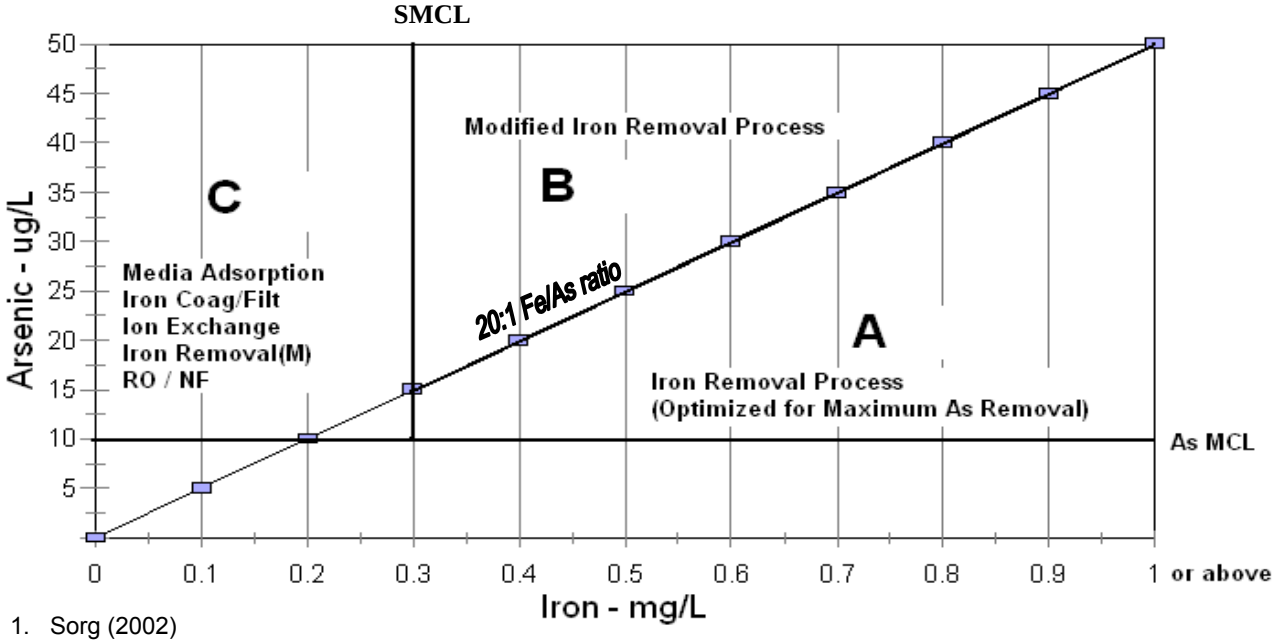

1. Sorg (2002)

The actual capacity to remove arsenic during iron removal is dependent on a number of factors, including water chemistry, operating considerations, and sequence of processes. Studies have shown that the sorption of arsenic onto iron solids is affected by many factors, including the amount and form of arsenic present, As(III), As(V); pH; water chemistry; amount and form of iron present; and the existence of competing ions, such as phosphate, silicate, and natural organic matter. Redox relationships between arsenic, iron, and oxidants are particularly important to consider when optimizing the removal of arsenic during iron removal.

Although manganese has similar properties to iron, it does not have a high capacity for arsenic removal. The arsenic removed by processes designed to remove both iron and manganese is primarily dependent on the iron removed. This chapter, therefore, has been devoted to iron removal processes although most of these processes also are effective for manganese removal.

Several variations exist to the traditional iron removal oxidation/filtration technology for ground water. Oxidation of iron can be accomplished by aeration or a chemical oxidant such as chlorine, potassium permanganate, or ozone. Aeration is not an effective mechanism for oxidation of arsenic. The oxidation step is usually followed by detention (tank) and filtration. Filtration options consist of sand only, coal anthracite and sand (dual media), manganese greensand, and various synthetic filtration media. The manganese greensand media is a special media that removes iron and manganese by combination of oxidation, adsorption, and filtration all within the media itself. The manganese greensand must be regenerated by feeding a solution of potassium permanganate.

It has been demonstrated that better removal of arsenic with iron can be achieved if the two contaminants are oxidized at the same time. Better adsorption and formation of an iron and arsenic floc occur when the two oxidize simultaneously. Therefore better arsenic removal will be achieved if aeration is eliminated and chemical oxidation is used for oxidizing both contaminants.

Table 4-1. Relative Effectiveness of Various Oxidants:[1]

Oxidant	Iron Oxidation	Manganese Oxidation	As(III) Oxidation
Air (aeration)	effective	not effective	not effective
Chlorine	effective	somewhat effective	effective
Chloramine	not effective	not effective	not effective
Ozone	effective	effective	effective
Chlorine dioxide	effective	effective	not effective
Potassium permanganate	effective	effective	effective

1. Hoffman (2006), Table 2-1

Particle development may benefit from extended contact times and may improve filtration. Contact time should be examined when anticipated arsenic removals are not achieved. Contact time for periods shorter than 20 minutes may need to be piloted depending on the oxidant chosen. A minimum contact time is not required when using potassium permanganate, but some contact time is recommended therefore point of application of potassium permanganate should occur as far in advance of filtration as possible.

In all oxidation/filtration processes, the filter media is periodically backwashed to dislodge solids and restore hydraulic capacity. Backwash water is typically a high-volume, low solids (less than 0.1 percent) waste stream. For waste handling options, see Chapter 8 of this manual and Section 4.5 of the Guidelines for Design of Small Public Ground Water Systems (Ohio EPA 2010).

4.1 Optimal Water Quality Conditions for Oxidation/Filtration for Arsenic Removal

pH 5.5 - 8.5

>0.3 mg/L Fe

Fe:As Ratio > 20:1

Public water systems with less than a 20:1 iron to arsenic ratio in their raw water may be required to conduct bench scale studies to determine if effective arsenic removal can be achieved with the natural iron concentration of the source water or if iron addition can improve arsenic removal. By conducting bench scale studies prior to design of the full scale system, the public water system will be able to more accurately predict arsenic removal efficiencies and waste residual concentrations.

Oxidation/filtration technology is expected to achieve an arsenic removal efficiency of 50 -85 percent from the raw water. If a system has to remove 85 percent or more of the raw water arsenic in order to consistently achieve a finished water quality of less than 0.010 mg/L, then the system must either be designed to include an additional treatment technology (such as adsorptive media) following iron removal, or piloted to demonstrate effective arsenic removal.

4.2 Treatment Methods

Co-removal of arsenic with iron can be achieved by one of the following methods, as applicable.

4.2.1 Chlorine Oxidation/Pressure Sand Filtration

Chlorine is recognized as an effective oxidant for both arsenic and iron. The procedure is to chemically oxidize the iron to its insoluble state by the use of chlorine. The oxidized arsenic then attaches to the iron floc which is then removed by filtration through a pressure sand filter. At least 20 minutes reaction time is to be provided for oxidation and floc formation to occur unless demonstrated otherwise through a pilot study.

4.2.2 Solid Oxidizing Media Filtration

Solid oxidizing media such as manganese dioxide and manganese dioxide coated media oxidize the iron on the media and trap the ferric hydroxide particles in the filter bed. Some As(V) can be adsorbed to the ferric hydroxide solids. The trapped iron solids are backwashed out of the filter to waste treatment. Some types of manganese dioxide can also oxidize As(III) to As(V).

Solid oxidizing media should not be relied upon by itself to effectively oxidize and remove arsenic. There are two ways that solid oxidizing media can effectively be used in conjunction with other treatment processes in order to address arsenic.

1. **The media can be used as the filter following a chemical oxidation step.** A chemical oxidant will be applied ahead of the filter to oxidize arsenic and iron to facilitate the co-removal process through the solid oxidizing media bed. For application of solid oxidizing media as a filter,

see the piloting guidelines in Section 4.4 and design standards in Section 4.3.5 of this chapter.

2. **The media can be used to oxidize arsenic when influent iron and manganese levels are not elevated**. If high levels of iron are present, solid oxidizing media should not be relied upon by itself to effectively oxidize arsenic since the iron will also get oxidized and will precipitate out and accumulate in the bed, hindering arsenic from reaching oxidation sites. This type of application would be followed by a polishing step of adsorptive media or ion exchange resin to ensure arsenic removal. See Chapter 3 of this manual for applying solid oxidizing media as an oxidant. See Chapters 5, 6 or 7 for piloting and design considerations for adsorptive media, anion exchange or POU/POE, respectively.

4.2.3 Manganese Greensand Filtration

Similar to chlorine oxidation/pressure sand filtration, manganese greensand filtration is another process that converts soluble forms of iron to insoluble forms by oxidizing with permanganate and then removing the iron/arsenic floc by filtration. For the purposes of arsenic removal, if permanganate alone is used for oxidation, the system must be designed with a continuous feed rather than batch regeneration for effective arsenic removal. The continuous feed of permanganate allows time for the arsenic to be oxidized prior to reaching the filter bed.

For more information on types and design requirements for iron and manganese removal refer to Sections 4.2, 4.5 and 4.6 of RSWW.

4.3 Filtration Standards for Arsenic Removal

After oxidation of iron and the formation of iron/arsenic solids, these solids must be removed from the water by filtration. The filtration media may consist of sand, sand and coal anthracite (dual media) or a proprietary product. Effective removal of iron particles by the filtration process is critical to good arsenic removal because iron particles appearing in the filter effluent contain (adsorbed) arsenic.

Some media, such as manganese greensand, have the dual ability to both oxidize and filter iron and manganese at the same time. Manganese greensand, pyrolusite, or any media coated with manganese dioxide has the capacity to oxidize iron and manganese and filter the insoluble precipitates with the filter bed. The greensand media processes are commonly selected for iron removal when manganese also needs to be removed because of their ability to handle both iron and manganese effectively. These media also have some capacity for As(III) oxidation and arsenic adsorption.

4.3.1 General Filtration Standards for Arsenic Removal

Pressure sand, manganese greensand, and manganese-coated sand filter systems shall comply with the following general requirements:

1. When chlorine oxidation is used, a minimum detention time of 20 minutes shall be provided ahead of filtration to ensure that the oxidation reactions are as complete as possible. This minimum detention time may be shortened only when a pilot study indicates less or no need for detention.

2. For any chemical oxidant addition, redundant chemical feed systems must be provided.

3. Normal filtration rates shall not exceed 3.0 gpm/ft^2 except where in plant testing, as approved by Ohio EPA, has demonstrated satisfactory results at higher rates.

4. Design shall be based upon the source with the highest average arsenic concentration. Source water concentration will be determined based upon an average concentration from a minimum of four samples collected at least seven days apart from each other. For systems with multiple sources, four samples must be collected from each source.

   For filtration, at least two filters are required for each treatment process for the removal of health-based contaminants.

   a. Source water arsenic concentration less than 0.020 mg/L.

      For water systems with a source water concentration less than 0.020 mg/L, redundant treatment will not be required if a contingency plan is submitted to describe how the necessary treatment unit can be repaired or replaced within 30 days.

   b. Source water arsenic concentration greater than or equal to 0.020 mg/L.

      Treatment to remove a source water arsenic concentration greater than or equal to 0.020 mg/L must be based on a contingency plan that describes how to comply with the MCL at all times [e.g., provide an additional treatment unit of adequate capacity (preferred method), utilize blending, have an emergency connection in place with another public water system, have water use restriction capabilities in place, etc.].

5. The filter media shall have a total depth of not less than 24 inches and generally not more than 30 inches.

6. Red water waste (backwash) shall be discharged to a sanitary sewer, through a red water filter, or any other method acceptable to Ohio EPA. Contact Ohio EPA Division of Surface Water for waste handling requirements.

7. The top of wash water collectors must be at least 18 inches above the surface of the media to allow for bed expansion.

8. Backwash lines must be installed in a manner as to prevent backsiphonage.

9. Sampling taps must be provided on each of the filter influent and effluent lines.

10. Each filter must have an air release valve and an access opening to facilitate inspection and repair where appropriate.

11. Filters should be backwashed until the effluent is clear (typically 10 to 15 minutes), as necessary.

12. Filters should be backwashed consecutively when possible.

13. Testing equipment acceptable to Ohio EPA should be provided to measure iron and manganese.

14. Tanks subject to pressurization may be required to comply with ASME code requirements or an equivalent requirement of the state and local laws and regulations for the construction and installation of unfired pressure vessels.

15. It is preferred that there is no penetration of the media, therefore units with effluent drop tubes are discouraged.

4.3.2 Pressure Sand Filtration Systems Standards

Pressure sand filtration systems designed for arsenic removal shall comply with the following specific design standards:

1. The filter sand shall have an effective size range of 0.45 mm to 0.55 mm and a uniformity coefficient no greater than 1.65.

2. A filter backwash rate of 15 to 20 gpm/ft^2 shall be provided.

4.3.3 Pressure Manganese-Coated Sand and Manganese Greensand Filtration System Standards

Pressure manganese-coated sand, and manganese greensand filtration systems shall comply with the following specific design standards:

1. Sampling taps must be provided prior to application of permanganate, immediately ahead of filtration, and at the filter effluent, and should be provided at a point between the anthracite media and the manganese coated greensand (if applicable), and halfway down the manganese greensand.

2. The chemical oxidant feed point should be located as far ahead of filtration as possible and before a retention tank if one is provided. If a retention tank is present, it is recommended a second chemical oxidant feed point be provided immediately ahead of the filter for regeneration of the media. Greensand filters which rely solely on batch regeneration without a continuous oxidant feed will not be permitted for arsenic removal. Batch regeneration of manganese greensand can be used for iron and manganese removal, but is not effective for arsenic removal. Oxidation of As (III) must occur on a continuous basis in order to be adsorbed onto the iron solids. This can only be done by continuous feed of potassium permanganate or chlorine upstream of the filters.

3. An anthracite media cap having a minimum depth of 6 inches must be provided over manganese greensand. The anthracite media shall have an effective size of 0.8 mm to 1.2 mm and a uniformity coefficient no greater than 1.85.

4. Synthetic manganese coated media which is not silica sand, or is silica sand but does not meet the specifications contained in RSWW Section 4.2.1.6.d.2 for silica sand, will require piloting to demonstrate their ability to effectively filter out the iron/arsenic floc. Manganese greensand, which is a natural zeolite mineral with an effective size of 0.30-0.35 mm and a uniformity coefficient of less than 1.85 does not require a pilot under this criteria. Manganese coated silica sand, which results from proprietary in-place applied manganese coating methods, having a 0.45mm-0.55mm effective size and uniformity coefficient of less than 1.65, will not require a pilot under this criteria. Piloting is described in Section 4.4 below.

5. Backwash rates shall be 8 to 10 gpm/ft^2 for greensand, and 15 to 20 gpm/ft^2 for manganese-coated silica sand for about 15 minutes, or until the backwash water runs clean. Different backwash rates are

required for the two media due to the difference in effective size. Air scouring is recommended for all different types of filters.

4.3.4 Integral Aeration, Reaction, and Filtration Units

1. Oxidant (potassium permanganate or chlorine) must be added at the retention section influent for oxidation of arsenic. Aeration alone is not an effective oxidant.

2. Adequate oxidation and filtration must be provided at all times, therefore the system cannot be designed with a bypass of the entire unit. In order to satisfy these requirements, a system has the option of providing two units each capable of treating the entire design flow or providing modified piping such that chemical oxidation and adequate filtration are provided during periods of maintenance. For the modified piping option, instead of providing a raw water bypass around the entire unit, the raw water bypass would be connected to the filter influent. Bypassing of the aerator and retention section will be permitted, but not the filters.

3. If a system chooses to meet the oxidation and filtration requirements through the use of modified piping, the system shall be designed as follows:

    a. An emergency pre-oxidation point, preferably placed as far upstream from the filters as possible, shall be provided for oxidation of iron, manganese and arsenic to allow for sufficient contact time. This pre-oxidation point is to be used to ensure continuous oxidation during periods of maintenance on the aeration and detention sections of the unit.

    b. Filter cells and especially underdrains must be separated as well. Valves must be provided on the influent to each filter cell and on the backwash and effluent from each cell to allow isolation of each filter cell.

    c. Filter cells must be sized to handle the approved design capacity as indicated in Section 4.3.1.4 above.

4.3.5. Solid Oxidizing Media

Both natural and synthetic forms of solid oxidizing media are available. Pyrolusite is a common name for naturally occurring manganese dioxide. For synthetic media, design criteria will vary, and the manufacturers' recommendations will be considered.

A backwash rate shall be designed to take into account the density of the media. For example, in the case of pyrolusite, a water backwash rate of 25- 30 gpm/ft^2 should be provided in order to fluidize the bed, scrub the media, and redistribute the pyrolusite throughout the sand (if mixed media is used). Air scour and water backwash are recommended in simultaneous mode. If water backwash alone is used, air scour prior to water backwash is recommended. A gravel retaining screen should be included in the design.

4.4 Piloting for Filter Media Approval for Use in Rapid Rate Gravity or Pressure Filters

The purpose of this section is to provide guidance on the minimum criteria necessary to obtain approval of non-conventional filter media for use in rapid rate gravity or pressure filtration units at groundwater treatment plants for the removal of iron, manganese and/or arsenic, which fall outside the classifications listed in RSWW, 2007 edition, Sections 4.2.1 and 4.2.2. Deviations from these guidelines should be explained and accompanied by documentation demonstrating equivalency which is acceptable to Ohio EPA.

4.4.1 Background and Objectives

The regulations and RSWW outline filter material specifications required for rapid rate gravity and pressure filters. In the event other filtration media (outside the scope of those specified in RSWW) are proposed, pilot plant studies or other means to demonstrate that the media is effective and reliable in removing iron, manganese and/or arsenic concentrations in ground water to meet drinking water standards will be required, in accordance with RSWW Section 1.1.8.

The objective of this guideline is to achieve consistency throughout the state of Ohio in administering provisions of the Ohio Revised Code and standard design criteria in regard to filter media used in rapid rate gravity and pressure filters at ground water systems. This guidance is a suggested approach in demonstrating that a particular filter media will be effective in accomplishing the treatment objective and result in compliance with OAC rule 3745-81-11, OAC rule 3745-82-02 and OAC rule 3745-91-09.

4.4.2. Pilot Procedure

1. Filter media being piloted for proposed use at public drinking water systems must have ANSI/NSF 61 certification as required by OAC rule 3745-83-01(D).

2. The pilot study may be conducted on either a reduced scale or an existing full scale filter. Water filtered through the piloted media to demonstrate removal and compliance with the arsenic MCL must be sent to waste and not sent to the distribution system. The pilot treatment must be isolated from the public water system by appropriate backflow prevention. If an existing plant full scale study is proposed, the performance of the filter with the piloted media should be compared to a control filter with existing media.

3. Any public water system planning to conduct a pilot study for arsenic removal should consult with Ohio EPA prior to initiation of the study. A written pilot protocol should be submitted for review by Ohio EPA prior to pilot testing initiation. A complete pilot protocol should contain the information listed below. The following must be reported along with the results of the study when seeking plan approval:

    a. A schematic of the treatment plant showing all of the treatment processes and pilot processes. The pilot configuration must include: sample taps at the raw water, filter influent, and filter effluent; pressure gauges before and after the filter; and a totalizing flow meter.

    b. Goals for the finished water. The following minimum goals apply to the finished water:

        i. Ninety-five percent of the sample results must be below the secondary maximum contaminant levels for iron (<0.3 mg/L) and manganese (<0.05 mg/L);

        ii. Ninety-five percent of the sample results must be in compliance with the arsenic MCL of 0.010 mg/L.

    c. Chemical oxidant concentration (%), feed rate (gph), and dosage (mg/L).

    d. A description of the composition and properties of the filter media, as well as the effective size and uniformity coefficient of the filter media shall be determined.

    e. The filtration rate during the study. The loading rate onto the filter media must be monitored and controlled.

    f. The length of each filter run between backwash cycles and filter head losses. The criteria used to backwash a filter shall be recorded.

g. The volume of water processed during each filter run. The volume of water used during each backwash cycle shall be recorded. A calculation of the percent recovery should be determined using the following formula:

   (total volume of water processed through pilot - volume used for backwash) ÷ (total volume of water processed through pilot) x 100

   A goal should be established for water recovery at the onset of the pilot.

h. Raw water quality data for each well. Data must include, at a minimum, results for iron, manganese, arsenic, and pH. Proposals for new treatment plants should include a recent full raw water well analysis for each of the wells. A list of the required parameters is available at: http://www.epa.ohio.gov/portals/28/documents/pws/CompleteWellAnalysis.pdf.

i. A record of which wells were operating during the pilot test. When multiple wells exist, the source water for the pilot should be representative of the water quality of the wells during normal operation and must include the worst case well operating scenario for the contaminants of concern.

j. A description of the operating schedule. Water should be processed through the filters for a minimum of 160 hours. The water should be processed through the filter at least eight hours per day, five days per week, for a total of four weeks minimum. Alternate operating schedules are acceptable, provided the goal of a total of 160 hours of filter operation is reached.

k. A description of the sampling schedule. At a minimum, samples must be collected in the following manner:

   i. For each contaminant of concern, (arsenic, iron and/or manganese) samples shall be taken from the pilot filter influent and pilot filter effluent for analysis three times daily or per filter run (beginning, middle, and end). If a full-scale study is proposed for an existing plant, control filter influent and effluent samples should also be taken at the same frequency.

      Following startup of a filter run, the first sampling event should occur after a waiting period, equal to at least three detention times through the filter. The subsequent samples should be taken at four hour intervals. An effort should be made to take a sample prior to initiating filter backwash.

ii. Samples should be taken at least once a week from the raw water and the filter effluent (pilot and control) for pH analysis.

iii. If chlorine is being used for oxidation, residual measurements must be taken before and after the filter daily. An onsite test kit may be used to measure chlorine concentrations.

iv. All analyses except pH and free chlorine shall be conducted at an Ohio EPA certified laboratory.

l. A description of waste handling for pilot and backwash water. Consult with Ohio EPA Division of Surface Water for waste handling options.

4. The collected data, along with conclusions and recommendations regarding the filter media performance, must be submitted to Ohio EPA upon completion of the pilot study as part of obtaining plan approval. All information listed in 4.4.2.3 of this chapter must be included in the final report. The collected data should be organized and plotted (if applicable), and presented in a report format.

4.4.3. Design Approval

Approval of detail plans will be required prior to construction of the proposed filters or replacement of filter media in existing units, in accordance with Section 6109.07 of the Ohio Revised Code and Chapter 3745-91 of the Ohio Administrative Code.

CHAPTER 5

ADSORPTIVE MEDIA PILOTING DESIGN AND CRITERIA

5.0 General

This chapter is intended to apply to all presently available and future adsorptive media for the removal of arsenic from drinking water supplies. Examples of adsorptive media are activated alumina (AA), modified AA, and iron based media. All media proposed for use in Ohio must be approved under NSF Standard 61. OAC rule 3745-91-06 requires supporting information for a project design to be provided that includes the basis of the design and other relevant information to facilitate approval of the plans. Furthermore, RSWW Section 1.1.8 requires that the adequacy of proposed processes for the treatment of the specific water under consideration be established, making bench scale tests, pilot studies, or demonstrations necessary in many cases. Experience with alternative or non-conventional methods of water treatment, such as adsorptive media for arsenic removal, has shown that the sustained effectiveness of a given technology is highly dependent on the chemistry of a specific source of water. Therefore, a pilot study will be required for adsorptive media technologies proposed for arsenic removal.

This chapter includes the guidelines for performing a pilot study to demonstrate the effectiveness of the proposed adsorptive treatment system in removing arsenic to levels reliably and consistently below the MCL. Also included in this chapter are the design criteria for the full scale adsorptive treatment system, and a discussion of the waste handling considerations for this technology.

5.1 Background

5.1.1. Activated Alumina

Activated alumina (AA) is a porous, granular material with ion exchange properties. Activated alumina grains have a typical diameter of 0.3 to 0.6 mm and a high surface area for sorption. In drinking water treatment, packed-bed AA adsorption is commonly used for removal of natural organic matter and fluoride. The removal of As(V) by AA adsorption can be accomplished by continuously passing water under pressure through one or more beds packed with AA media.

The level of competing ions affects the performance of AA for As(V) removal, although not in the same manner or to the same extent as ion exchange. The following selectivity sequence has been established for AA adsorption (USEPA, 2000):

$OH^- > H_2AsO_4^- > Si(OH)_3O^- > F^- > HSeO_3^- > TOC > SO_4^{2-} > H_3AsO_3$

The selectivity of AA towards As(III) is poor, owing to the overall neutral molecular charge at pH levels below 9.2. Therefore, pre-oxidation of As(III) to As(V) is critical. Several different studies have established the optimum pH range as 5.5-6.0, and demonstrated greater than 98 percent arsenic removal under these conditions. Activated alumina column runs operated under acidic pH conditions are 5 to 20 times longer than under natural pH conditions (6.0-9.0). However, many small utilities elect to conduct AA treatment under natural pH conditions. In these cases, the savings in capital and chemical costs required for pH adjustment offset the costs associated with decreased run length. (USEPA, 2003)

Several constituents can interfere with the adsorption process, either by competing for adsorption sites or clogging the media with particulate matter. These constituents, and their corresponding problematic levels, are summarized in Table 5-1.

Table 5-1 Water Quality Interferences with Activated Alumina Adsorption [1]

Parameter	Problem Level (mg/L)
Chloride	> 250
Fluoride	> 2
Silica	> 30
Iron	> 0.5
Manganese	> 0.05
Sulfate	> 720
Dissolved Organic Carbon	> 4
Total Dissolved Solids	> 1000

1. USEPA (2003), Table 2-3.

Hydraulic considerations associated with AA adsorption include EBCT and headloss. For most types of AA media, the recommended EBCT range is 3 to 10 minutes. The presence of suspended solids in the feed water could gradually clog the media, thereby increasing headloss. Filtration as a pretreatment step to adsorptive media is recommended for sources where the turbidity exceeds 0.3 NTU.

The technologies and market for alumina-based adsorptive media continue to expand. There are several emerging proprietary media, commonly referred to as modified AA, which contain alumina in a mixture with other substances such as iron and sulfur. In some instances, these

media have greater overall adsorptive capacities, enhanced selectivity towards arsenic, and/or greater overall operational flexibility than conventional AA, thus making them more cost effective. Water systems may want to consider these media as treatment options, however all media used in water treatment must be approved under NSF Standard 61.

AA media can either be regenerated onsite or disposed of and replaced with fresh media. On-site regeneration of AA media typically produces 37 to 47 bed volumes of caustic soda waste (USEPA, 2000). Because of the high pH of the regeneration process, roughly percent of the AA media dissolves during each regeneration sequence. Therefore, the waste solution typically contains high levels of TDS, aluminum, and soluble arsenic. In most cases, this arsenic level will exceed the 5.0 mg/L Toxicity Characteristic (TC), and the waste stream will be classified as a hazardous liquid waste. Backwashing may also be necessary to prevent cementation of the media, which can occur as a result of dissolution caused by chemical addition during regeneration. For these reasons, regeneration of AA is likely to be an impractical option for most small water systems.

The alternative for utilities considering AA adsorption is the use of throwaway media, operated with or without pH adjustment. The savings in O&M requirements and residuals disposal may offset the cost of periodically replacing the media. For this option, systems must provide an equalization basin for backwash water (if applicable) and a staging area to store spent media prior to disposal. Throwaway AA media is expected to not exceed any TCs, enabling it to be disposed of in a municipal solid waste landfill (Wang et al., 2000). As an added convenience to small systems, media suppliers may offer a media disposal service with the purchase of their AA media.

5.1.2. Iron Based Sorbents

Adsorption on iron based sorbents (IBS) is an emerging treatment technique for arsenic. All media proposed for use in Ohio must be approved under NSF Standard 61. The sorption process has been described as chemisorption (Selvin et al., 2000), which is typically considered to be irreversible. It can be applied in fixed bed pressure columns, similar to those for AA. Due to limited performance research at the time the arsenic rule was promulgated, it was not designated as a BAT or a small system compliance technology (SSCT) by U.S.EPA.

The few studies conducted with IBS media have revealed that the affinity of this media for arsenic is strong under natural pH conditions, relative to AA. This feature allows IBS to treat much higher bed volumes without the need for pH adjustment. However, similar to AA, optimal IBS performance

is obtained at lower pH values. The recommended operating conditions include an EBCT of five minutes and a hydraulic loading rate of 5 gpm/ft^2.

Phosphate has been shown to compete aggressively with As(V) for adsorption sites. Each 0.5 mg/L increase in phosphate above 0.2 mg/L will reduce adsorption capacity by roughly 30 percent (USEPA, 2003; referenced to Tumalo, 2002).

In previous studies, exhausted IBS media has not exceeded any toxicity characteristics, enabling it to be disposed of in a municipal solid waste landfill (USEPA, 2003; referenced to MacPhee et al., 2001) As an added convenience to small systems, media suppliers may offer a media disposal service with the purchase of their IBS media.

5.2 Piloting - Guidelines for Obtaining Approval of Adsorptive Media Treatment Systems for Arsenic Removal

The following guidelines are intended to provide technical guidance to staff and members of the regulated community and to suggest an approach for developing and conducting pilot studies for adsorptive media. The purpose of the pilot study is to determine the capability of the proposed adsorptive media treatment system to meet treatment objectives for the removal of arsenic in order to achieve compliance with regulatory requirements. The type of information and data collection that Ohio EPA determines will provide a comprehensive study by which to make an informed decision on the acceptability of the study and overall treatment approach are described. Deviations from these guidelines should be explained prior to the submittal of detailed plans and accompanied by documentation demonstrating equivalency which is acceptable to Ohio EPA.

5.2.1 Objectives

A pilot study will be required for adsorptive media technology proposed for removal of arsenic as part of the plan approval process. Any public water system planning to conduct a pilot study for arsenic removal should consult with Ohio EPA prior to initiation of the study. A written pilot protocol should be submitted for review by Ohio EPA prior to pilot testing initiation. Factors to be considered when choosing a treatment strategy are listed in the Arsenic Treatment Technology Summary Comparison Table which can be found in Appendix B of this manual (USEPA, 2003 table ES-1).

The total treatment scheme needed for arsenic removal with adsorptive media may require pretreatment or post-treatment processes which also must be evaluated. Consideration should also be given to how the overall treatment strategy affects finished water quality parameters other than arsenic, including corrosion control and stability.

5.2.2. General Pilot Operating Conditions and Procedures

1. A pilot study may be conducted on a reduced scale or full scale level. Water processed through the pilot system must be sent to waste during the pilot study.

2. Adsorptive media used at public drinking water systems must have ANSI/NSF 61 approval as required by OAC Rule 3745-83-01(D).

3. Where a new media process is proposed for an existing or new water treatment plant, the treatment being piloted must utilize the water following any existing or proposed processes that will precede the media units in the proposed design.

4. A professional engineer should be involved in preparing the pilot protocol, providing oversight during the pilot study, and preparing the final report for the pilot. Preferably, the pilot protocol will be prepared by the same engineer that will submit the detail plans. The detail plans must be prepared by a professional engineer.

5. It is strongly recommended that the Division of Surface Water be contacted as early as possible to determine options for disposal of waste streams from both the pilot and the full scale plants. The following are examples of disposal options that may be acceptable:

   a. Direct discharge to a stream. A national pollution discharge elimination system (NPDES) permit is required based on waste stream characterization, receiving stream low flow discharge, and protection of water quality standards.

   b. Discharge to a publicly owned treatment works (POTW). If the discharge is to a POTW's approved pretreatment program, the local POTW should be contacted for any possible limits or specific pretreatment needed. A list of approved pretreatment programs are available at: *http://www.epa.ohio.gov/dsw/pretreatment/Permit_list_approved_programs.aspx* or contact Ohio EPA Division of Surface Water.

      If the discharge is to any POTW other than a Ohio EPA approved pretreatment program, then the PWS will be covered by Ohio EPA's permit-by-rule requirements (OAC rule 3745-36-06) if it is a non-significant industrial user. If a PWS is a significant industrial user (OAC rule 3745-36-02(U), it will need to submit an indirect

discharge application to Ohio EPA for possible pretreatment limits (OAC rule 3745-03).

5.2.3. Pilot Protocol Criteria

1. The purpose of the pilot study is to assess the performance and suitability of the adsorptive media system, to determine operating parameters, to assess any interference from competing ions or solids buildup within the media bed, and to determine the necessary backwashing frequency and procedures so as to receive approval for the process from Ohio EPA.

   The following information must be collected and provided to Ohio EPA for review. This information should be submitted as part of a complete pilot protocol for acceptance prior to initiation of the study.

   a. A description of the existing or proposed sources, wells or wellfields, and existing treatment facilities and operational history of the wellfield.

   b. Recent results from analysis of raw water quality data from each source (preferably within the previous 12-month period). If recent data is not available, then samples shall be collected and analyzed for the parameters in Table 5-2, and the data provided with the pilot protocol. Arsenic speciation is recommended to determine the percentage of arsenic existing in the reduced and oxidized states. The protocol shall identify any interfering ions of foulants present in the raw water with the potential to affect the media's performance.

   c. Statements of objectives and conclusions from an evaluation of the raw water quality, and identifying critical water quality issues to be evaluated during the study. Varying water quality among source waters should be addressed during the pilot study. Well operation during the pilot study must be specified and designed to address the most challenging water quality conditions occurring during typical full scale operation.

   d. A description of pretreatment considerations. If foulants are detected in the raw water at levels of concern as listed in Table 5-1 or as specified by the manufacturer, then pretreatment to remove the foulants will likely be required. An oxidizing agent that will be used to convert As(III) to As(V) may be necessary. Also, possible pH adjustment for improving media performance may be considered for activated alumina if this is a viable option for pretreatment.

The description shall include the names of chemicals to be added, the point of application, percent solution strength, dose in mg/L, and contact time provided ahead of arsenic removal equipment.

e. If proposing to use existing equipment for pretreatment, then in addition to raw water data, an analysis of key parameters must be conducted on water following the existing equipment operating at design capacity. Results for the treated water must be submitted with the pilot protocol. Specifically, for systems proposing to utilize existing softeners for pretreatment to remove iron and manganese prior to adsorptive media, additional information and testing will be required to prove reliability and consistency in removal. Prior to submitting a pilot proposal, a system with an existing softener to be utilized as pretreatment shall sample for iron, manganese, and hardness concentrations, at least once, from the influent to and the effluent from the softener to determine if iron and manganese are being removed to acceptable levels and the softener is still functioning to remove hardness. Results of these analyses must be submitted with the pilot protocol, along with the other suggested raw water quality data.

   If a system wants to utilize an existing softener for pretreatment which has not undergone plan approval, more detailed information about the components of the softener will be required. At a minimum, specifications of the resin shall be provided to Ohio EPA which includes the capacity of the resin, as well as the surface area and depth of the resin in the softener tank, and the regeneration cycle of the resin with reasoning and calculations supporting the frequency of this regeneration.

f. Schematic drawings of the facilities and detailed descriptions of the processes to be used. The schematic drawings must show any existing equipment which will be used as well as the pilot equipment. The detailed description must include specifications of the tank including the diameter, height, and composition. Specifications of the media must be provided. A filter profile must be provided which includes the freeboard, depth of the media, supporting gravel and underdrain. The loading rate (gpm/ft^2) and empty bed contact time must be provided.

   The scale of the pilot must take into consideration the loading rate and EBCT, the depth of media to diameter of tank ratio for maintaining hydraulic correctness, and an acceptable pressure drop as to represent the full scale treatment that will be proposed. Differences between the pilot configuration and the proposed full scale water treatment plant shall be clearly noted and discussed.

The media used for the pilot study must be the same media that will be proposed for the full scale system. The need for additional testing of a modified design will be reviewed on a case by case basis.

g. Water quality goals. Influent water quality must meet pretreatment objectives and finished water quality will demonstrate that arsenic is removed to levels below 10 µg/L.

h. Mode(s) of operation to be tested, and frequency of operational data collection. Operational parameters that must be recorded include flow, bed volumes treated, backwash cycles and pressure differential across media bed for both arsenic treatment and any related pretreatment. The trigger for initiating backwash must be specified (such as pressure loss). The pilot study protocol shall include a target for initiation of the backwash cycle which will represent full scale operational procedures. If the target is reached, a backwash operation shall be performed. It is recommended that at least one backwash cycle be performed during the study even if the target is not reached, in order to assess the impact of this procedure on media performance.

i. Sampling locations to be monitored, including pretreatment and post-treatment processes, when required.

j. Parameters to be monitored at each sampling location and the frequency of monitoring. The pilot sampling schedule should be based on Table 5.2 below.

k. Description of on-line and bench analytical equipment to be used for monitoring each parameter (i.e. pH or chlorine analyzer).

l. Quality assurance/quality control procedures to be used. Analyses of all parameters for which Ohio EPA laboratory certification is available shall be conducted in an Ohio EPA certified laboratory (unless indicated otherwise in Table 5-2).

2. The protocol must describe the operating schedule. At a minimum, water should be processed through the media for 480 hours of operation during the pilot study to assess the performance and reliability of the media. The goal is to provide evidence of successful arsenic removal for a continuous 480 hours, which is representative of three months of typical operations. If results for arsenic during the pilot study indicate that sufficient removal is not being achieved, contact Ohio EPA, DDAGW.

5.2.4 Pilot Study Data Collection

1. The following information must be collected and reported for the study:

    a. The analytical results for the parameters listed in Table 5-2 below.

    b. The parameters needed to determine the calcium carbonate precipitation potential should be monitored to determine the possibility of calcification of the media bed. The pH, alkalinity, temperature, calcium concentration, and measured TDS are needed to calculate calcium carbonate precipitation potential. The calcium carbonate precipitation potential of the water before the media tanks should be less than 10 (a generally agreed upon number for this index which represents acceptable levels of precipitation).

    c. Pretreatment information: type and amount of chemicals used per day, specific gravity, dosage and solution strength, contact time for oxidation, pH adjustment, performance of pretreatment.

    d. Post treatment information: type and amount of chemicals used per day, specific gravity, dosage and solution strength for pH adjustment. Alkalinity stability (Langelier Index) of the effluent water from the media tanks should be between -1 and 1.

    e. Differential pressure across tank(s).

    f. Flow rates and totalizer readings.

    g. Bed volumes treated.

    h. Run length until initiation of backwash, backwash method, duration, frequency for associated pretreatment (if applicable) and adsorptive media.

    i. Additional data may be needed for certain specific treatment objectives. Waste residual analysis (i.e. wastewaters and spent media) during the study may be beneficial in determining necessary disposal strategies.

    j. Parameters identified by the manufacturer that are not included in Table 5-2 which may cause fouling of the media or interfere with arsenic removal should also be monitored.

Table 5-2. Minimum Recommended Adsorptive Media Pilot Study Parameters and Frequency for Analysis.

Pre-Demonstration Study A raw sample is taken one time at start of study at each well or combination of wells and analyzed for all parameters. Parameter	Pilot Protocol			
	Sampling Point(s)[1]		Frequency[2]	Reason for Collection
	Type of Pretreatment		Demonstration Study * Samples are taken at the specified frequency at such location(s) dictated by the type of pretreatment:	
	with pH adjustment	without pH adjustment		
total arsenic	IN, Te, Ti	IN, Te, Ti	Weekly	To assess consistent arsenic removal efficiency
Speciation As(III) and As(V)	Raw, IN	Raw, IN	If using a chemical oxidant, once at beginning of study	To assess the effectiveness of the chemical oxidant and dose chosen
	Raw, IN	Raw, IN	If using a solid oxidizing media, three times during study (i.e. Beginning, middle and end, an attempt should be made to sample prior to initiating a backwash cycle of oxidizing media	Solid oxidizing media's continued effectiveness in converting As (III) to As (V).
	Raw, Te	Raw, Te	If no pre-oxidant is used, three times during study (i.e. Beginning, middle and end)	To assess removal of both forms by the adsorptive media.
pH[3]	Raw, IN, AP	IN, Te	Daily for pH adjustment, weekly if not intentionally adjusting pH	Important in adsorption capacity of media
alkalinity	Raw, IN, AP	Raw, IN, Te	Weekly if adjusting pH otherwise Bi-weekly	Needed to determine dosage for pH adjustment; needed for CCPP calculation, an indicator in stability/corrosion control
fluoride	IN, Te	IN, Te	Weekly [4] only if using activated alumina or other media where F is a competing ion	Competing ion for AA
chloride	IN, Te	IN, Te	Weekly [4]	Interfering ion
sulfate	IN, Te	IN, Te	Weekly [4]	Competing ion
aluminum	Te	Te	Bi-weekly for activated alumina only	AA media can contribute aluminum to water
calcium	Raw, IN, Te, AP	Raw, IN, Te	Bi-weekly	Needed to determine CCPP calculation and oversight for calcification concerns
Hardness[3]		IN[5]	Weekly	Indicator if softener is working
magnesium	Te	Te	Bi-weekly	To calculate hardness or stability of finished water
Iron	Raw, IN, Te	Raw, IN, Te	Weekly	Can foul media; monitor effectiveness of pretreatment
manganese	Raw, IN, Te	Raw, IN, Te	Weekly	Can foul media; monitor effectiveness of pretreatment
Turbidity[3]	IN	IN	Weekly	Indicator of problematic water quality for media and to assess if solids are being removed by treatment
Temperature[3]	Raw, IN, AP	Raw, IN, Te	Bi-weekly	Used for CCPP calculation, affects rate of backwash
TDS	Raw, IN, Te	Raw, IN, Te	Bi-weekly, unless softening, then weekly	Indicator of problematic water quality for media, assess if treatment removing dissolved metals/salts
Silica	IN, Te, Ti	IN, Te, Ti	Weekly [4]	Competing ion
Phosphate	IN, Te, Ti	IN, Te, Ti	Weekly [4]	Competing ion, especially for iron-based media
Vanadium	IN, Te, Ti	IN, Te, Ti	Weekly [4]	Identified as an interfering factor for some media
Nitrate	Te	Te	Three times during study (i.e., beginning, middle and end)	If elevated, alternate treatment may be more appropriate (i.e., anion exchange)
Total Organic Carbon	Raw, Te	Raw, Te	Three times during study (i.e., beginning, middle and end)[4]	Identified as an interfering factor for some media
Total and free Chlorine [3,6]	IN, Te	IN, Te	Weekly	Test for residual; indicator of proper oxidant dosing

1. Raw = Source water prior to any storage, treatment or chemical addition

IN = influent to adsorptive media tank system
Te= effluent of adsorptive tank in parallel or effluent of polishing tank in series
Ti = intermediate point between adsorptive tanks, in series only
AP= after post treatment pH adjustment

2. Daily means once every 8 hours of continuous operation , weekly means once every 40 hours, bi-weekly means once every 80 hours.

3. These parameters may be analyzed onsite during the study. All other parameters must be analyzed at an Ohio EPA certified laboratory.

4. A system will not be required to conduct weekly or biweekly sampling for these parameters provided they are not detected at levels in the raw water which are above the recommended optimal water quality range as listed in Appendix B, Table ES-1 of EPA 816-R-03-014 or manufacturer's recommended limitations in the influent sampling point for two consecutive sampling events.

5. Hardness continued monitoring only required if a softener is used prior to adsorptive media tanks.

6. Analysis required only if chemical oxidant used is chlorine.

5.2.5 Approval Criteria for Media

1. Piloted media will have to be tested the entire period specified. If any portion of the pretreatment processes, media or post-treatment processes to be used in the full scale water treatment plant is different from the piloted process, additional testing may be required. Changes should be described and potential impacts should be discussed to determine if additional testing is needed.

2. Individual results of all analyses performed on parameters included in Table 5-2, all operational monitoring recorded, and conclusions and recommendations regarding the selection of the piloted treatment for the site based on the study, must be submitted.

3. Media maintenance recommendations must be submitted. The pilot study data and other relevant data shall be evaluated and a recommendation made regarding backwash frequency and procedures to optimize media performance and longevity.

4. The results of the finished water arsenic concentrations measured during the pilot test must be less than the regulatory limit. Other primary and secondary standard parameters for finished water should be less than regulatory limits for all samples.

5. Information should be submitted in a report format which presents and clearly summarizes the results and the conclusions and recommendations of the study. In addition to the required data collected, the report should include the following sections:

    a. A descriptive narrative which clearly defines and presents the set-up and operations of the pilot test including, but not limited to, the raw water source, any treatment applied, the flow and application rates, run lengths, and backwash cycles.

b. A data analysis that provides the maximum, average, minimum and standard deviations for individual parameters per sampling point where applicable. The report should also include any other information collected during startup.

c. A narrative which describes how the results demonstrate that the proposed treatment scheme is able to achieve the finished water quality goals identified in the pilot study plan, including parameters related to corrosion control and stability (i.e., when softening and/or pH adjustment are used).

6. The media chosen should have an expected life which exceeds three months if to be used in series operation or six months if to be used in parallel operation.

5.3 Adsorptive Media Minimum Specifications/ Design Criteria

Following a successful pilot study and approval of the findings of the study by Ohio EPA, the water system is expected to submit detail plans for approval of the proposed treatment design, as required by OAC rule 3745-91-02.

The adsorptive media for the full scale system must be the same as that used in the pilot study. Pretreatment processes, the surface loading rate and EBCT for the full scale adsorptive media design must be the same or more conservative than that used in the pilot study. Deviations from the pilot design needs to be fully supported.

5.3.1 General Design Guidelines

1. If an adsorptive media has only the capacity to remove pentavalent (As(V)) arsenic, a pre-oxidation step must be provided. If a media has the capability of removing As (III) and As (V), a design without pre-oxidation may be considered if the system has conducted a pilot study which demonstrated effective removal of As (III) without pre-oxidation. The system should include speciation of both influent and effluent water to the tanks during the pilot study.

2. Pretreatment for iron and manganese reduction will likely be required if either of these contaminants is over SMCLs.

3. If central treatment is deemed essential for compliance with a health-based contaminant, the system design shall not include a complete permanent bypass of the treatment.

4. Chemical feeds should be before the hydropneumatic tanks. If chemical feed is after the hydropneumatic tanks, it must be flow-paced. Adsorptive media units should be after the hydropneumatic tanks.

Positioning the adsorptive media units after the hydropneumatic tanks protects against shocking the media with intermittent use.

5. When treating for removal of a health- based contaminant, the water treatment plant shall have appropriate redundancies for all essential processes and associated equipment, in accordance with 2007 RSWW or such other publications as may be prepared by Ohio EPA for guidance to designers of public water systems. Peak hourly flow requirements, finished water storage capacity, operating hours and procedures should be taken into account when determining redundancy requirements so that an adequate amount of safe drinking water is available at all demand times.

5.3.2 Treatment Vessel Design

1. Design shall be based upon the source with the highest average arsenic concentration. Source water concentration will be determined based upon an average concentration from a minimum of four samples collected at least seven days apart from each other. For systems with multiple sources, four samples must be collected from each source.

   At least two units are required for each treatment process for the removal of health-based contaminants.

   a. Source water arsenic concentration less than 0.020 mg/L.

      For water systems with a source water concentration less than 0.020 mg/L redundant treatment will not be required if a contingency plan is submitted to describe how the necessary treatment unit can be repaired or replaced within 30 days.

   b. Source water arsenic concentration greater than or equal to 0.020 mg/L.

      Treatment to remove a source water arsenic concentration greater than or equal to 0.020 mg/L. must be based on a contingency plan that describes how to comply with the MCL at all times [e.g., provide an additional treatment unit of adequate capacity (preferred method), utilize blending, have an emergency connection in place with another public water system, have water use restriction capabilities in place, etc.].

2. Tank set up may be in series or in parallel.

    a. A series configuration consists of a lead and lag tank with additional lag tank(s) if warranted. If only one lead and one lag tank are provided, each should be able to treat the design flow and provide the minimum required EBCT at design flow. If a series train consists of more than one lag tank, the tanks should be sized such that the combination of tanks in operation will be able to treat the entire design flow at the accepted hydraulic loading rate and provide the minimum required EBCT.

    b. A parallel configuration consists of two or more media tanks supplied by a common manifold. With one tank out of service the remaining tank(s) should be able to treat the entire design flow at the accepted hydraulic loading rate and empty bed contact time as determined in the pilot study. Operation of the tanks should be staggered in order to avoid simultaneous exhaustion of the media.

3. It is preferred that there is no penetration of the media, therefore units with effluent drop tubes are discouraged.

4. For treatment bed and vessel design calculations, see Appendix D (Figure 3.5 in USEPA Design manual : Removal of Arsenic from Drinking Water by Adsorptive Media).

    a. Bed Depth - The depth of the bed should be a minimum of three feet and a maximum of six feet. Very small systems may have units sized with a one to two feet diameter tank and if so, should have a minimum bed depth of two feet.

    b. Bed Diameter - The diameter should be greater or equal to one-half the bed depth.

5. Empty Bed Contact Time (EBCT):
    Activated Alumina - A minimum of five minutes.

    Other Media Types - Recommend five minutes but can be set per manufacturer's recommendations or as determined by piloting. Designing for five minute EBCT allows for flexibility to change media in the future if new media requires longer EBCT.

6. Piping, valving and tanks shall be designed such that each tank can operate independently of the other tank.

7. Flowmeters with totalizers must be provided at the head of each treatment train if in series, or at the influent into each tank if in parallel flow.

8. Influent and effluent pressure indicators shall be provided on each tank.

9. Maximum flow through velocity should not exceed manufacturer's recommendations (typically 5-7 gpm/sf for activated alumina). Consult manufacturer for expected flow through velocity for other adsorptive media.

10. Tank Access and Media Loading/Unloading:

    a. A manway on the top of the tank shall be provided and a manway on the side of the tank is recommended, each sized to provide easy access for cleaning of the tank and during loading and unloading of the media.

    b. A space of at least six feet (or as deemed adequate) should be provided from the top of the tank to a ceiling or roof to allow for ease in equipment maneuvering when loading or unloading media at the top of the tank.

    c. Media loading should be processed in steps. Each loading step should allow for wetting of the media during placement into the tank. Following each step in loading the media, the media should be thoroughly backwashed so as to remove fines. Once all the media has been placed, the tank should be backwashed until the backwash water runs clear.

    d. In the case of activated alumina which contains a caustic coating, the media must be washed until the pH stabilizes before putting the tank online for treatment to distribution, in addition to ensuring all fines are removed from the media bed.

    e. Tanks should have filter-to-waste capability.

5.3.3 Adsorptive Media

The following media specifications and characteristics must be provided:

1. Capacity of media, either in grains per cubic feet or milligrams per cubic feet. Capacity is defined as the unit of mass of arsenic removed per volume of media.

2. Density of the media.

3. Expected life of the media:

   a. If in series flow, the roughing tank should be designed to last longer than 3 months before tank effluent water arsenic levels reach 80 percent of the MCL. If in parallel flow each tank should be designed to last longer than six months before (*each*) tank effluent water arsenic levels reach 80 percent of the MCL.

   b. In series design, consider allowing the lead tank to run to exhaustion (influent equals effluent), or to 10 ug/L in effluent (decision depending on influent arsenic concentration and amount that will hit the lag tank once the lead tank loses capacity), before requiring tank switching or change out of media in the lead tank. Since the lag tank will have close to all of its removal capacity remaining, it can be placed in the lead position (therefore get the most life out of the media in the lead position).

   c. Calculations used in determining the expected life of the media should be submitted with the report.

5.3.4 Backwash/ Regeneration

1. Describe the source which will provide an adequate quantity of backwash water. The backwash water should be of a quality equal to that being supplied to the media tanks.

2. Backwash rate should be enough to provide 50 percent expansion of the media. Typically 7 gpm/sq.ft. is needed for activated alumina. Consult the manufacturer for similar information on other adsorptive media. The rate necessary is dependent on the density of the media.

3. In order to minimize on site chemical handling and storage, it is recommended that media be used on a throw-away basis or that the spent media be regenerated off site. For treatment designed with on site media regeneration for activated alumina, the regeneration system should provide the following necessary processes[1]:

Table 5-3. Typical Process Conditions for Regeneration of Activated Alumina.[1,2]

Step No.	Step	Liquid	Flow Direction	Rate (gpm/sf)	Time (minutes)	Wastewater produced (gal/cu.ft of AA)
1	Backwash	Raw water [3]	Upflow	7	10	30
2	Regeneration	5% NaOH	Upflow	1.2	60-90	15
3	Rinse	Raw water [3]	Upflow	2.5	60	30
4	Regeneration	5% NaOH	Downflow	1.2	60-90	15
5	Neutralization	Raw water [3] adjusted to pH 2.5	Downflow	Varies	Time to achieve pH of 8.0	240
6	Neutralization	Raw water [3] adjusted to pH 4.0	Downflow	Varies	Time to achieve pH of 6.5	
7	Neutralization	Raw water [3] adjusted to pH 5.5	Downflow	Varies	Time to achieve pH of 5.5	
					Total	330

1. Rubel (2003a), Table 5-3
2. Consult manufacturer for similar information on other adsorptive media.
3. Raw water must be of quality adequate to be sent to the adsorptive media. Water of pretreated quality should be used if pretreatment is necessary for the functionality of the media treatment.

5.3.5 Waste Handling

1. Provide calculations of waste volumes generated and describe handling facilities.

2. Ensure that proper disposal of all wastes has been accounted for and required permits applied for (including backwashing, any regenerative wastes, and media disposal).

5.3.6 Reference for Design Calculation and Schematic

Design calculations and schematic of series tank configuration for an adsorptive media system can be found in USEPA Design Manual: Removal of Arsenic from Drinking Water by Adsorptive Media (Rubel 2003b). Pages 13-15 depict series configuration with options for pH adjustment and media regeneration. Page 16 outlines treatment bed and vessel design calculations. These referenced pages can be found in Appendix D and E of this manual.

CHAPTER 6

ANION EXCHANGE PILOTING AND DESIGN CRITERIA

6.0 General

This chapter is intended to apply to all presently available and future anion exchange resins for the removal of arsenic from drinking water supplies. Ion exchange is a physical/chemical process in which ions are swapped between a solution phase and solid resin phase. Arsenic (V) can be removed through the use of a strong-base anion exchange resin (SBA) in a chloride form. OAC rule 3745-91-06 requires supporting information for a project design to be provided that includes the basis of the design and other relevant information to facilitate approval of the plans. Furthermore, RSWW Section 1.1.8 requires that the adequacy of proposed processes for the treatment of the specific water under consideration be established, making bench scale tests, pilot studies, or demonstrations necessary in many cases. Experience with this treatment has shown that the sustained effectiveness is highly dependent on the chemistry of a specific source of water. In addition, the regeneration frequency needed to ensure consistent arsenic removal without breakthrough is critical to establish. Therefore, a pilot study will be required to demonstrate the site specific effectiveness of anion exchange technology for arsenic removal.

This chapter includes the guidelines for performing a pilot study to demonstrate the effectiveness of the proposed anion exchange treatment system in removing arsenic to levels reliably and consistently below the MCL. Also included in this chapter are design criteria for a full scale anion exchange treatment system, and a discussion of the waste handling considerations for this technology.

6.1 Background

In the anion exchange process, arsenic ions bind to an SBA and, in the process, displace chloride ions. The resin is contained within a pressure vessel and periodically regenerated with a concentrated salt solution. Water softeners function similarly, however through a cation exchange process, which removes calcium and magnesium from water in exchange for sodium.

Other ions compete with As(V) for binding sites on the SBA. The effectiveness of anion exchange (IX) for arsenic removal is dependant on the presence of and concentrations of other competing anions present in the raw water supply. The selectivity of the anion exchange resin to choose one anion over another anion present, is as follows, from most selective, to least selective (Rubel 2003b) for a typical strong base (SBA) anion exchange resin :

$$UO_2(CO_3)_3^{-4} > SO_4^{-2} > HAsO_4^{-2} > NO_3^{-1} > SeO_3^{-2} > NO_2^{-1} > Cl^{-1} > HCO_3^{-1} > F^{-1}$$

The most selective anion $UO_2(CO_3)_3^{-4}$ will be removed first and will displace other anions once all available sites for exchange are used. Various anion exchange resins are available on the market, some of which are claimed to be modified to select arsenic over other anions, such as sulfate.

One of the primary concerns related to anion exchange treatment is the phenomenon known as chromatographic peaking, which can cause As(V) and nitrate levels in the treatment effluent to exceed those in the influent stream. This can occur if sulfates are present in the raw water and the bed is operated past exhaustion. Because anion exchange media has a higher affinity for sulfate, incoming sulfate anions may displace previously sorbed As(V) and nitrate. In most ground waters, sulfates are present in concentrations that are orders of magnitude greater than As(V). Therefore, the level of sulfates is one of the most critical factors to consider for determining the number of bed volumes that can be treated. In some areas of Ohio where hydrogen sulfide is present, a test of the raw water for total sulfides is recommended since when oxidized, hydrogen sulfide will contribute to sulfate levels.

A useful technique for avoiding chromatographic peaking is to perform careful monitoring of the effluent stream during startup. Then, based on the analysis, determine a setpoint for the total volume treated before breakthrough occurs. This volumetric setpoint would then be used to trigger the regeneration cycle. Regular monitoring of the column effluent should be continued to ensure that loss of capacity in the media does not lead to premature breakthrough. Frequently, the volumetric setpoint is based on the breakthrough of sulfate. The kinetics of breakthrough are rapid; therefore a margin of safety should be provided by employing multiple IX columns in series.

Pre-oxidation of As(III) to As(V) is required prior to the SBA column, since only As(V) can be effectively removed by ion exchange. If a chlorine residual is present, de-chlorination of the influent to the anion exchange unit may be necessary depending on the susceptibility of the resin to strong oxidants (i.e. pass through a GAC column). Following IX treatment, pH adjustment of the treated water may be required since carbonate ions bind to the resin decreasing the pH of the treated water following startup of a freshly regenerated ion exchange column.

Other raw water quality characteristics may affect the arsenic removal performance of the SBA treatment system. Factors such as high TDS, iron, manganese, pH, and turbidity may necessitate pretreatment (such as filtration) before the anion exchange column. The ion exchange media is not intended to be used as a filter, but rather as an exchange column for contaminant removal. In general, the IX process may not be a viable treatment technology if the influent water quality is outside the optimal ranges listed in Table 6-1:

Table 6-1. Optimal Water Quality Conditions for Anion Exchange[1]

Contaminant	Range
pH	6.5-9 SU
Nitrate	<5 mg/L
Sulfate	<50 mg/L
Total Dissolved Solids	<500 mg/L
Turbidity	<0.3 NTU
Iron/Manganese/Heavy Metals	<0.1 mg/L

1. USEPA (2003), Table ES-1

The waste products from ion exchange are the liquid backwash, rinse, and spent brine streams and the solid spent media. A state wastewater discharge permit may be required for public water systems employing ion exchange. In most instances, the spent brine will contain more than 5.0 mg/L of arsenic and will be classified as hazardous (USEPA 2003). Public water systems considering SBA for arsenic removal need to determine if their waste streams will be classified as hazardous waste. When discharge to a POTW is not possible, alternative arsenic removal technologies that do not produce a hazardous waste should be considered. Contact the appropriate Ohio EPA Division(s) to discuss waste disposal requirements.

6.2 Piloting Guidelines For Anion Exchange Resin Treatment Systems For Arsenic Removal

The purpose of this section is to establish the standard protocol for conducting a pilot study to determine the capability of the proposed SBA treatment system to meet treatment objectives for the removal of arsenic in order to achieve compliance with regulatory requirements. This guidance is a suggested approach for evaluating the feasibility of anion exchange resin treatment systems for arsenic removal in ground water systems. Deviations from these guidelines should be explained and accompanied by documentation demonstrating equivalency which is acceptable to Ohio EPA.

6.2.1. Objectives

OAC rule 3745-81-11 requires all community and nontransient noncommunity water systems to serve water that is in compliance with the MCL for arsenic of 0.010 mg/L.

Currently, removal of arsenic from drinking water by anion exchange is not commonly practiced in Ohio, and falls under the category of nonconventional technology for which a pilot study is required. Before a

public water system submits a proposal for a pilot study, Ohio EPA strongly recommends that the water system meet with DDAGW staff to discuss the appropriateness of using anion exchange as a treatment strategy for arsenic removal at that site. A guideline of the factors to be considered when evaluating anion exchange for arsenic removal can be found in Appendix B.

Anion exchange is a process that may be used to achieve compliance with the arsenic MCL. The total treatment scheme needed for arsenic removal with anion exchange may require pretreatment or post-treatment processes which must also be evaluated. Consideration should also be given to how the overall treatment strategy affects finished water quality parameters other than arsenic, including corrosion control and stability.

The objective of this guidance is to achieve consistency throughout the state of Ohio in regard to the use of anion exchange resin for compliance with arsenic treatment requirements.

6.2.2. General Pilot Operating Conditions and Procedures

1. A pilot study may be conducted on a reduced scale or full scale level. Water processed through the pilot system must be sent to waste during the pilot study.

2. Ion exchange resin used at public drinking water systems must have ANSI/NSF 61 approval as required by OAC rule 3745-83-01(D).

3. Where a new media process is proposed for an existing or new water treatment plant, the treatment being piloted must utilize the water following any existing or proposed processes that will precede the media units in the proposed design.

4. A professional engineer should be involved in preparing the pilot protocol, providing oversight during the pilot study, and preparing the final report for the pilot. Preferably, the pilot protocol will be prepared by the same engineer that will submit the detail plans. The detail plans must be prepared by a professional engineer.

5. It is strongly recommended that the Ohio EPA Division of Surface Water be contacted as early as possible to determine options for disposal of waste streams from both the pilot and the full scale plants. The following are examples of disposal options that may be acceptable:

    a. Direct discharge to a stream. A national pollution discharge elimination system (NPDES) permit is required based on waste

stream characterization, receiving stream low flow discharge, and protection of water quality standards.

b. Discharge to a POTW. If the discharge is to a POTW's approved pretreatment program, the local POTW should be contacted for any possible limits or specific pretreatment needed. A list of approved pretreatment programs is available at: *http://www.epa.ohio.gov/dsw/pretreatment/Permit_list_approved_programs.aspx* or contact Ohio EPA Division of Surface Water.

   If the discharge is to any POTW other than an Ohio EPA approved pretreatment program, then the PWS will be covered by Ohio EPA's permit-by-rule requirements (OAC rule 3745-36-06) if it is a nonsignificant industrial user. If a PWS is a significant industrial user (OAC rule 3745-36-02(U), it will need to submit an indirect discharge application to Ohio EPA for possible pretreatment limits (OAC Chapter 3745-03).

6.2.3. Pilot Protocol Criteria

1. The purpose of the pilot study is to assess the performance and suitability of the anion exchange system; to determine operating parameters; to assess any interference from competing ions or solids buildup within the media bed; and to determine the necessary backwashing/regeneration frequency and procedures so as to receive approval for the process from Ohio EPA.

   The following information must be collected and provided to Ohio EPA for review. This information should be submitted as part of a complete pilot protocol for acceptance prior to initiation of the study.

   a. A description of the existing or proposed sources, wells or wellfields, and existing treatment facilities and operational history of the wellfield.

   b. Recent results from analysis of raw water quality data from each source (preferably within the previous 12-month period). If recent data is not available, then samples shall be collected and analyzed for the parameters in Table 6-2, and the data provided with the pilot protocol. Arsenic speciation is recommended to determine the percentage of arsenic existing in the reduced and oxidized states. The protocol shall identify any interfering ions of foulants present in the raw water with the potential to affect the resin's performance.

   c. Statements of objectives and conclusions from an evaluation of the raw water quality, and identifying critical water quality issues to be

evaluated during the study. Varying water quality among source waters should be addressed during the pilot study. Well operation during the pilot study must be specified and designed to address the most challenging water quality conditions occurring during typical full scale operation.

d. A description of pretreatment considerations. If foulants are detected in the raw water at levels of concern as listed in Table 6-1 or as specified by the manufacturer, then pretreatment to remove the foulants will likely be required. An oxidizing agent that will be used to convert As(III) to As(V) will likely be necessary.

   The description shall include the names of chemicals to be added, the point of application, percent solution strength, dose in mg/L, and contact time provided ahead of arsenic removal equipment.

e. If proposing to use existing equipment for pretreatment, then in addition to raw water data, an analysis of key parameters must be conducted on water following the existing equipment operating at design capacity. Results for the treated water must be submitted with the pilot protocol. Specifically, for systems proposing to utilize existing softeners for pretreatment to remove iron and manganese prior to anion exchange, additional information and testing will be required to prove reliability and consistency in removal. Prior to submitting a pilot proposal, a system with an existing softener to be utilized as pretreatment shall sample for iron, manganese, and hardness concentrations, at least once, from the influent to and the effluent from the softener to determine if iron and manganese are being removed to acceptable levels and the softener is still functioning to remove hardness. Results of these analyses must be submitted with the pilot protocol, along with the other suggested raw water quality data.

   If a system wants to utilize an existing softener for pretreatment which has not undergone plan approval, more detailed information about the components of the softener will be required. At a minimum, specifications of the resin shall be provided to Ohio EPA which includes the capacity of the resin, as well as the surface area and depth of the resin in the softener tank, and the regeneration cycle of the resin with reasoning and calculations supporting the frequency of this regeneration.

f. Schematic drawings of the facilities and detailed descriptions of the processes to be used. The schematic drawings must show any existing equipment which will be used as well as the pilot equipment. The detailed description must include specifications of

the tank including the diameter, height, and composition. Specifications of the resin must be provided. A filter profile must be provided which includes the freeboard, depth of the resin, supporting gravel and underdrain. The loading rate (gpm/ft^2) and EBCT must be provided.

The scale of the pilot must take into consideration the loading rate and EBCT, the depth of resin to diameter of tank ratio for maintaining hydraulic correctness, and an acceptable pressure drop as to represent the full scale treatment that will be proposed. Differences between the pilot configuration and the proposed full scale water treatment plant shall be clearly noted and discussed. The resin used for the pilot study must be the same resin that will be proposed for the full scale system. The need for additional testing of a modified design will be reviewed on a case by case basis.

g. Water quality goals. Influent water quality must meet pretreatment objectives and finished water quality will demonstrate that arsenic is removed to levels below 10 µg/L.

h. Mode(s) of operation to be tested, and frequency of operational data collection. Operational parameters that must be recorded include flow, bed volumes treated, backwash and regeneration frequency, backwash and regeneration duration, backwash and regeneration method, differential pressure across media, pretreatment and post treatment. The trigger for initiating the regeneration cycle must be specified. This target for regeneration must represent full scale operational procedures.

i. Sampling locations to be monitored, including pretreatment and post-treatment processes, when required.

j. Parameters to be monitored at each sampling location and the frequency of monitoring. The pilot sampling schedule should be based on Table 6.2 below.

k. Description of on-line and bench analytical equipment to be used for monitoring each parameter (i.e. pH or chlorine analyzer).

l. Quality assurance/quality control procedures to be used. Analyses of all parameters for which Ohio EPA laboratory certification is available shall be conducted in an Ohio EPA certified laboratory (unless indicated otherwise in Table 6-2).

2. The pilot study to assess the performance and reliability of the media should be performed for a minimum of three regeneration cycles.

The pilot study protocol shall include a target for initiation of the regeneration cycle. Timing of regeneration shall be based on volume treated and not on time alone. If the target is reached, a regeneration operation will need to be performed.

In order to build in a safety factor to the timing of regeneration, at the start of pilot period the volume of water processed through the media before the first regeneration should be 1.5 times the volume of water calculated for the target regeneration rate. If arsenic in the finished water exceeds 0.010 mg/L or nitrate exceeds 5 mg/L after this test, the PWS is to adjust the regeneration rate such that levels do not exceed these values in the finished water. Once it has been established that the safety factor has been achieved, the system should continue for three more regeneration cycles at the anticipated regeneration rate of the full scale system and sample as specified in Table 6-2.

If regeneration is conducted with an acid solution and not brine, then this protocol does not apply and the PWS should contact Ohio EPA DDAGW for guidance and consultation.

6.2.4 Pilot Study Data Collection

1. The following data must be collected and reported for the pilot study:

    a. The analytical results for the parameters listed in Table 6-2 provided below.

    b. The parameters needed to determine the calcium carbonate precipitation potential should be monitored to determine the possibility of calcification of the media bed. The pH, alkalinity, temperature, calcium concentration, and measured TDS are needed to calculate calcium carbonate precipitation potential. The calcium carbonate precipitation potential of the water before the anion exchange tanks should be less than 10 (a generally agreed upon number for this index which represents acceptable levels of precipitation).

    c. Pretreatment information: type and amount of chemicals used per day, specific gravity, dosage and solution strength, contact time for oxidation, pH adjustment, performance of pretreatment.

    d. Post- treatment information: type and amount of chemicals used per day, specific gravity, dosage and solution strength for pH adjustment. Alkalinity stability (Langlier Index) of the effluent water from the anion exchange tanks should be between -1 to 1.

e. Differential Pressure across tank(s)

f. Flow rates and totalizer readings

g. Bed volumes treated

h. Run length until initiation of backwash/regeneration, backwash/regeneration method, duration, and frequency for associated pretreatment (if applicable) and the ion exchange media.

i. Additional data may be needed for certain specific treatment objectives. Waste residual analysis during the study may be beneficial for determining necessary disposal strategies.

j. Parameters identified by the manufacturer that are not included in Table 6-2 which may cause fouling of the media or interfere with arsenic removal should also be monitored. If chlorinating prior to ion exchange equipment, additional monitoring for chlorine residuals will be required.

Table 6-2. List of Recommended Parameters and Sampling Frequencies for Target Regeneration Cycle Testing.

Pre-Demonstration Study A raw sample is taken one time at start of study at each well or combination of wells and analyzed for all parameters. **Parameter**	**Pilot Protocol**		
	Sampling Point(s)[1] (Sampling at Ti applicable only if have multiple tanks in series)	Sample Frequency Between regeneration events (per run cycle)	Reason for Collection
Total arsenic	IN, Te, Ti	4 times per run cycle at each sampling point. Collect at intervals of 10, 50, 75 and 100 percent of flow volume.	To assess consistent arsenic removal efficiency across run cycles
Arsenic Speciation	Raw, IN	At least twice during the study. If solid oxidizing media is used an attempt should be made to sample prior to initiating a backwash cycle of the oxidizing media.	To determine that arsenic is in the oxidized state (As(V)) prior to anion exchange process.
pH[2]	IN	Once per run cycle	Important in effective exchange. Needed for CCPP calculation, an indicator in stability/corrosion control
Alkalinity[3]	IN, Te	Once per run cycle at each sampling point	Carbonate is removed in the exchange process. Needed for CCPP calculation, an indicator in stability/corrosion control
Chloride	IN, Te, Ti	2 samples per run at each sampling point. Collect when reach 10 and 100 percent of flow volume.	Will be released into effluent during the exchange process.
Sulfate	IN, Te, Ti	2 samples per run at each sampling point. Collect when	Will be selected and removed over arsenic in the exchange process. Can be present in

Pre-Demonstration Study A raw sample is taken one time at start of study at each well or combination of wells and analyzed for all parameters. **Parameter**	**Pilot Protocol**		
	Sampling Point(s)[1] (Sampling at Ti applicable only if have multiple tanks in series)	Sample Frequency Between regeneration events (per run cycle)	Reason for Collection
		reach 10 and 100 percent of flow volume.	concentrations significantly greater than arsenic.
Nitrate	IN, Te, Ti	2 samples per run at each sampling point. Collect when reach 10 and 100 percent of flow volume	Will be removed with the exchange process. Nitrate breakthrough is a concern.
Calcium	IN, Te, Ti	Once per run cycle	Needed for CCPP calculation and oversight for calcification concerns
Sodium			
Hardness[3]	IN (only if softening is used as pre-treatment	Once per run cycle	Indicator if softener is functioning properly
magnesium	No further analysis necessary once raw water concentration is known		Needed to calculate hardness for stability of raw water
Iron[4]	IN, Te, Ti	Once per run cycle	Can foul resin
Manganese[4]	IN, Te, Ti	Once per run cycle	Can foul resin
Turbidity[2]	IN	Once per run cycle	Indicator of problematic water quality for resin
Temperature[2]	IN	Once per run cycle	Used for CCPP calculation and affects rate of backwash
TDS	IN	Once per run cycle	Indicator of problematic water quality for resin

1. IN = influent to anion exchange media tank system
   Te = effluent of anion exchange tank in parallel or effluent of polishing tank in series
   Ti = When multiple tanks are used, Ti is the intermediate point between anion exchange tanks in series only

2. Parameters may be analyzed on site. Temperature must be measured on site. All other parameters must be analyzed at an Ohio EPA certified laboratory.

3. Alkalinity measurements include Total and Phenolphthalein. Hardness measurements include Total and Non-carbonate.

4. One sample at each sampling point per run cycle must be analyzed at a certified lab, more frequent sampling using a test kit is recommended.

6.2.5 Approval Criteria for Media

1. Piloted media will have to be tested the entire period specified. If any portion of the pretreatment, media or post-treatment to be used in the full scale water treatment plant is different from the piloted process, additional testing may be required. Changes should be described and potential impacts should be discussed to determine if additional testing is needed.

2. Individual results of all analyses performed on parameters included in Table 6-2, all operational monitoring recorded, and conclusions and recommendations regarding the selection of the piloted treatment for the site based on the study, must be submitted.

3. The pilot study data and other relevant data shall be evaluated and a recommendation made regarding backwash/regeneration frequency and procedures to optimize resin performance and longevity.

4. The results of the finished water arsenic concentrations measured during the pilot test (three consecutive cycles) must be less than the regulatory limit. Finished water nitrate concentrations must be less than the MCL in all samples. Other primary and secondary standard parameters for finished water should be less than regulatory limits for all samples.

5. Information should be submitted in a report format which presents and clearly summarizes the results and the conclusions and recommendations of the study. In addition to the required data collected, the report should include the following sections:

    a. A descriptive narrative which clearly defines and presents the set-up and operations of the pilot test including, but not limited to, the raw water source, any treatment applied, the flow and application rates, run lengths, and backwash/regeneration cycles.

    b. A data analysis that provides the maximum, average, minimum and standard deviations for individual parameters per sampling point where applicable. The report should also include any other relevant information collected during startup.

    c. A narrative which describes how the results demonstrate that the proposed treatment scheme is able to achieve the finished water quality goals identified in the pilot study plan, including parameters related to corrosion control and stability (i.e., when softening and/or pH adjustment are used).

6.3 Anion Exchange Minimum Specifications/ Design Criteria

Following a successful pilot study and approval of the findings of this study by Ohio EPA, the water system is expected to submit detail plans for approval of the proposed treatment design, as required by OAC rule 3745-91-02.

The anion exchange media for the full scale system must be the same as that used in the pilot study. Pretreatment processes, the surface loading rate and EBCT for the full scale anion exchange media design must be the same or more conservative than that used in the pilot study. Full scale regeneration cycles should be based on piloting results. Deviations from the pilot design needs to be fully supported.

6.3.1 General Design

1. An oxidant is necessary to ensure that all arsenic entering the ion exchange system is present as As (V).

2. Influent levels of iron or manganese should be below SMCLs prior to entering the anion exchange unit. If raw water levels of either iron or manganese exceed an SMCL, prefiltration for removal is necessary.

3. If central treatment is deemed essential for compliance with a health based contaminant, the system design shall not include a complete permanent bypass of the treatment.

4. Chemical feeds should be before the hydropneumatic tanks. Ion exchange units should be after the hydropneumatic tanks. Positioning the ion exchange units after the hydropneumatic tanks protects against shocking the media with intermittent use. If chemical feed is after the hydropneumatic tanks, it must be flow paced.

5. When treating for removal of a health-based contaminant, the WTP shall have appropriate redundancies for all essential processes and associated equipment, in accordance with 2007 RSWW. Peak hourly flow requirements, finished water storage capacity, operating hours and procedures should be taken into account when determining redundancy requirements so that an adequate amount of safe drinking water is available at all demand times.

6.3.2 Treatment Vessel Design

1. Design shall be based upon the source with the highest average arsenic concentration. Source water concentration will be determined based upon an average concentration from a minimum of four samples collected at least seven days apart from each other. For systems with multiple sources, four samples must be collected from each source.

   At least two units are required for each treatment process for the removal of health-based contaminants.

   a. Source water arsenic concentration less than 0.020 mg/L.

      For water systems with a source water concentration less than 0.020 mg/L redundant treatment will not be required if a contingency plan is submitted to describe how the necessary treatment unit can be repaired or replaced within 30 days.

   b. Source water arsenic concentration greater than or equal to 0.020 mg/L.

      Treatment to remove a source water arsenic concentration greater than or equal to 0.020 mg/L must be based on a contingency plan that describes how to comply with the MCL at all times [e.g.,

provide an additional treatment unit of adequate capacity (preferred method), utilize blending, have an emergency connection in place with another public water system, have water use restriction capabilities in place, etc.].

2. Tank set up may be in series or in parallel.

   a. A series configuration consists of a lead and lag tank with additional lag tank(s) if warranted. If only one lead and one lag tank are provided, each should be able to treat the design flow and provide the minimum required EBCT at design flow. If a series train consists of more than one lag tank, the tanks should be sized such that the combination of tanks in operation will be able to treat the entire design flow at the accepted hydraulic loading rate and provide the minimum required EBCT.

   b. A parallel configuration consists of two or more media tanks supplied by a common manifold. With one tank out of service the remaining tank(s) should be able to treat the entire design flow at the accepted hydraulic loading rate and empty bed contact time as determined in the pilot study. Operation of the tanks should be staggered in order to avoid simultaneous exhaustion of the media.

3. It is preferred that there is no penetration of the media, therefore units with effluent drop tubes are discouraged.

4. For treatment bed and vessel design calculations, see Figure 3.3 in USEPA's design manual, *Removal of Arsenic from Drinking Water by Ion Exchange.* This figure is included in this manual as Appendix F.

5. Minimum EBCT should be at least 1.5 minutes. Flow through rate should be between 8-12 gpm/ft^2.

6. Piping, valving and tanks shall be designed such that each tank can operate independently of the other tank.

7. Flowmeters with totalizers must be provided at the head of each treatment train if in series, or at the influent into each tank if in parallel flow.

8. Influent and effluent pressure indicators shall be provided on each tank.

6.3.3 Ion Exchange Media

Provide specifications for media to include following characteristics:

1. Capacity of media, either in grains per cubic feet or milligrams per cubic feet. Capacity is defined as the unit of mass of arsenic removed per volume of media

2. Density of the media.

3. Pounds of salt required per unit of anion (i.e. arsenic) removed during regeneration.

6.3.4 Backwash / Regeneration

1. Describe source of adequate quantities of water to perform the backwash/regeneration/rinse cycles. The backwash water should be of a quality equal to that being supplied to the media tanks.

2. Recommended backwash rate is 3 to 4 gpm/ft^2 for 15 to 20 minutes with bed expansions based on manufacturer's recommendations, but not to be less than 50percent.

3. Regeneration requirements shall be based on manufacturer's recommendations, however, the minimum recommended time for brine solution to flow through the bed is 30 minutes.

4. Slow rinse should be based on manufacturer's recommendations, not to exceed 4 gpm/ft^2, with a minimum displacement of two bed volumes per column.

5. Fast rinse takes place based on manufacturer's recommendations, not to exceed 20 gpm/ft^2, with a minimum displacement of two bed volumes per column.

6. It is preferred that the initiation of regeneration should be based upon flow treated, rather than on time elapsed.

7. System shall detail the backwash and regeneration flow rates and volumes generated.

6.3.5 Residual Handling and Waste Disposal for Anion Exchange

1. Provide calculations of waste volumes generated . System should calculate expected waste stream arsenic concentrations under normal operating conditions and contact appropriate Ohio EPA divisions to discuss disposal options.

2. Detail disposal methods for wastes generated. Ensure that proper disposal of all wastes has been accounted for and required permits applied for (including backwashing, any regenerative wastes, and media disposal).

Wastes generated by anion exchange include spent brine, backwash water, and spent media. The three most probable methods for disposal of spent brine that contains less than 5.0 mg/L of arsenic are indirect disposal through a POTW, controlled discharge to a stream, or discharge to a separate leaching type sewage disposal system. The feasibility of indirect discharge of brine waste will be dictated by technically based local limits (TBLLs) for total dissolved solids (TDS).

Spent brine used in the regeneration of arsenic-laden resin may be classified as hazardous. Therefore, manipulating the chemical form of the waste on-site constitutes treatment of a hazardous waste, which has extensive permit and cost implications. As a result, when the brine waste stream contains over 5.0 mg/L of arsenic, indirect discharge to a POTW is considered the only viable option for small utilities. Consult with the POTW to determine if a spent brine holding tank is required to slowly release the spent brine to the POTW. When discharge to a POTW is not possible, alternative arsenic removal technologies that do not produce a hazardous waste should be considered.

Eventually the resin will need to be disposed of and replaced with new resin. The appropriate disposal method for solid waste is dependant on the results of the TCLP. Options for solids disposal are described in Chapter 8 of this manual.

6.3.6 Reference for Design Calculation and Schematic

Design calculations and schematic of series tank configuration for an anion exchange system can be found in USEPA Design Manual: Removal of Arsenic from Drinking Water by Ion Exchange (Rubel 2003b). Page 16 outlines treatment bed and vessel design calculations and page 17 depict series configuration. These referenced pages can be found in Appendix F of this manual.

CHAPTER 7

NON-CENTRALIZED TREATMENT: POINT-OF-USE AND POINT-OF-ENTRY TREATMENT DEVICES

7.0 General

Under the federal rule, USEPA offers the use of non-centralized treatment units as a compliance option for public water systems in meeting the arsenic standard. Two types of non-centralized treatment units are specified, Point-of-Use (POU) and Point-of-Entry (POE). Point-of-use and point-of-entry are addressed in Ohio EPA's rules, specifically OAC Rule 3745-81-01 for definitions and OAC Rule 3745-81-19 for requirements. In the rules, a point-of-entry treatment device is defined as a treatment device applied to the drinking water entering a house or building for the purpose of reducing the contaminants in the drinking water distributed through all, or a portion of, the house or building. Point-of-use treatment device is defined as a treatment device applied to a single tap used for the purpose of reducing contaminants in drinking water at that one tap.

7.1 Applicability

Under Ohio EPA's rules, only those water systems classified as nontransient, noncommunity water systems are eligible to use POU or POE treatment devices for arsenic removal. Community water systems are not permitted to use non-centralized treatment devices to achieve compliance with the arsenic standard.

Any tap or taps that are commonly used to obtain water for ingestion must be treated for arsenic removal. There shall be a sufficient number of treated taps such that all consumers will have access to water which meets the standard for arsenic. The POU or POE device must provide treatment which is on par with providing the quality of drinking water produced by a well operated centralized treatment plant. As with centralized treatment, a POU or POE treatment strategy will require plan approval.

When designing a new system or adding treatment to an existing system, the system shall be sized according to the demand. Please see RSWW Section 1.0 and 2.0 for new source development and determining system sizing requirements, as well as the Guidelines for Design of Small Public Ground Water Systems (Ohio EPA 2010).

Compliance with other drinking water standards must be taken into account when considering a POE treatment strategy for arsenic removal. Special considerations should be given to lead and copper compliance when using RO technology. Installation of any POE treatment device will require subsequent lead and copper monitoring at the taps served by the device. In addition, with both POU and POE treatment designs, microbiological sampling requirements may increase. The public water system must revise their bacteriological sampling siting plan to incorporate the POU device locations.

POU devices may be an economically feasible approach for small nontransient noncommunities which have a limited number of taps that must be treated. When considering a non- centralized treatment approach, the need for pretreatment, the number of taps that must be treated, and number of devices that must be acquired should be taken into account.

7.2 Requirements for POU/POE Drinking Water Treatment Units

7.2.1. Certification

1. Devices installed as part of a compliance strategy must be certified according to the American National Standards Institute (ANSI) standards. Devices must be tested against the corresponding ANSI/NSF standards by an ANSI accredited laboratory. (Examples of accredited laboratories include NSF International, Underwriter's Laboratories, Inc., Water Quality Association, CSA International, and International Association of Plumbing and Mechanical Officials Research and Testing Inc.)

   In the certification listings, next to each device it will be specified as to whether it can remove pentavalent and/or trivalent arsenic.

   a. RO membrane units must be certified per ANSI/NSF Standard 58 (NSF 2004b) - Reverse Osmosis Drinking Water Treatment Systems.

   b. Units utilizing an adsorptive media, such as activated alumina or iron-based sorbents, must be certified per ANSI/NSF Standard 53 (NSF 2004a) - Drinking Water Treatment Units-Health Effects.

   c. Distillation Units must be certified per ANSI/NSF Standard 62 (NSF 2004c) - Drinking Water Distillation Units.

2. Each standard assumes that water to be treated by a POU/POE device is considered microbiologically safe.

3. If a POU/POE device is certified for pentavalent arsenic removal, the standard used assumes that all arsenic in the water sent to the device is in the pentavalent state. If the raw water arsenic is not in the pentavalent state, a pretreatment oxidation step must be included before the POU/POE device. If chlorine is used for oxidation, there should be at least two minutes contact time prior to water entering the device.

4. Water quality must be conducive to using a POU/POE device, meaning it does not contain foulants at concentrations that may render the device less effective or useless (i.e. iron, heavy metals, hardness and saturation potential, high TDS or solids). The standards do not take into account high levels of foulants (such as iron and manganese) when certifying POU/POE devices. See NSF protocols 53, 58 and 62 for a comprehensive list of the water quality concentrations that constitute the challenge water for testing POU/POE arsenic reduction capacity. All POU/POE devices will have inherent limitations regarding influent water quality, and considerations should be made to either remove foulants before the device or to choose an alternative POU/POE technology which is not subject to interferences from the raw water constituents of concern. Pretreatment to remove iron and manganese which are above the secondary maximum contaminant level, and/or excessive hardness is necessary prior to arsenic reduction through a POU/POE device. The manufacturer will be able to provide the optimal water quality criteria recommended for their device. In the absence of manufacturer's recommendations, the following influent water quality concentrations can be used as guidelines when choosing a POU technology or determining the need for pretreatment.

Table 7.1 Parameters of Concern Affecting POU/POE Treatment Systems

Parameter	Concentration of Concern	Impacts on RO	Impacts on AA
[1]Silica	greater than 50 mg/L	May lead to fouling of the membranes	Reduces arsenic removal capacity
[1]Fluoride	greater than 2 mg/L	May interfere with arsenic rejection during membrane filtration process	Competes for sites in the adsorptive media column
[1]Iron	greater than 0.3 mg/L	Iron scale formation may foul RO membranes	Particulate iron may clog adsorptive media column
[1]Manganese	greater than 0.05 mg/L	Mn scale may foul RO membrane	Particulate Mn may clog adsorptive media column
[1]Sulfides	greater than 0.2 mg/L		Precipitate may clog adsorptive media column
[2]Sulfate	greater than 360 mg/L		Competes for adsorption sites
[2]Total Dissolved Solids	greater than 1,000 mg/L	Affects efficiency	Interferes with adsorption of arsenic
[2]Total Organic Carbon (TOC)	greater than 4 mg/L	TOC, particularly the presence of natural organic matter, can foul membrane and create biological growth concerns	Interferes with adsorption of arsenic
[1]Calcium and magnesium(hardness), barium, sulfate, carbonate	greater than saturation potential	Scale formation on surface affects removal	
[1]Chloride	greater than 250 mg/L	Can lead to scale	Interferes with adsorption

Parameter	Concentration of Concern	Impacts on RO	Impacts on AA
		formation on surface which affect removal	of arsenic
[2]Free Chlorine* (*if fed)	variable and type dependant	Some membranes are sensitive to chlorine and will deteriorate	
[2]Turbidity	greater than 0.3 NTU	Solids clog membrane	Solids clog media column
[2]pH	variable and type dependent	Plays a role in fouling potential or removal efficiency (type dependant)	Impacts arsenic removal efficiency (optimal arsenic removal occurs within pH range of 5.5-8.5, media specific)
[2]Phosphate* (*if fed)	greater than 1.0 mg/L		Competing ion especially for iron based sorbents (each 0.5 mg/L increase above 0.2 mg/L will reduce adsorption capacity by 30%)[2]

1. AwwaRF (2005), Table 4.1
2. USEPA (2003) Table ES-1

5. The device(s) must be owned or controlled by the public water system or a contractor of the public water system.

6. POE units are packaged units. The units must be installed with the same components that were tested to receive the ANSI/NSF certification. POE units must not be altered in such a manner that would invalidate their ANSI/NSF certification.

   Please note, if a treatment system serving multiple taps is not a POE unit certified under ANSI/NSF 53, 58 or 62, the piloting requirements of this chapter do not apply, however the sampling monitoring plan, etc appropriate to non-centralized treatment do apply. The POE treatment system will be subject to more rigorous piloting requirements outlined for centralized treatment plants elsewhere in this document. The piloting guidelines, design requirements and recommendations found in other chapters of this document should be followed. The components of the treatment system must therefore comply with ANSI/NSF standard 61. Centralized design requirements can be found in the specific treatment sections of this manual (i.e. adsorptive media, anion exchange, oxidation/filtration) and in RSWW and the Guidelines for Design of Small Public Ground Water Systems (Ohio EPA 2010).

7.2.2 Piloting for Non-Centralized Treatment Devices

1. A raw water quality evaluation shall be conducted on each well that will be used as the raw water source for drinking water. The raw water

quality evaluation will aid in determining the most appropriate treatment and what pretreatment, if any, will be required. The raw water quality evaluation shall include a recent chemical and microbiological analysis for constituents that may affect the performance or maintenance of the proposed device. A recent analysis is one that was conducted within 12 months of submitting the plan approval application.

If the raw water quality is not within the manufacturer's recommended optimal water quality range or is above the levels stated in Table 7.1, pretreatment for the contaminant(s) of concern will very likely be needed to ensure the requirements of OAC Rule 3745-81-19 are met.

If any existing treatment will remain in place and serve as pretreatment to the POU or POE device, then a water quality evaluation of treated water effluent for parameters indicating treatment effectiveness shall be reported with the raw water results.

2. A backflow prevention device should be installed on the pilot influent line.

3. Any maintenance or replacement of any component of the POU or POE treatment devices must be recorded in a log and included with the pilot report. Should the unit fail at any time during the pilot, report the failure to Ohio EPA, DDAGW for consultation on how to proceed.

4. In regard to POU devices:

    a. Results from an acceptable demonstration study are required for approval of plans for a specific POU device. Piloting a proposed POU device on a single tap is required before choosing a POU strategy for compliance with the arsenic MCL. Piloting can provide the PWS with some certainty that the device will adequately remove arsenic before purchasing the required number of units or abandoning a centralized treatment plan.

    b. Operation of the device during the pilot shall consist of the following:

        i. Operation of the device should mimic actual water use practices at that tap. Intermittent usage patterns shall be simulated with an on/off cycle and should be run as needed to achieve an output that is at least 120 percent of the expected average daily demand at that tap.

ii. The study should last an equivalent of three months, based on eight hours of operation a day, or to the rated capacity of the unit with an intermittent on/off schedule. (Alternative operation times which could shorten the pilot period to less than three months and still provide equivalent pilot data could be considered and may be accepted on a case by case basis).

iii. There should be at least one continuous eight hour rest period for each 24 hour period of the pilot test.

c. Sampling of the device shall consist of the following:

i. Influent and effluent arsenic shall be sampled at least six times throughout the pilot at equally spaced intervals. Collect the first sample at startup once the system has stabilized, and the last sample at the end of the study.

ii. If pretreatment is required to remove contaminants of concern, those contaminants shall be sampled at the same sampling locations and frequency as arsenic. Operational data relevant to pretreatment (eg. backwash frequency, chemical dosage, flow rate) should also be reported. Total dissolved solids shall always be included in sampling requirements for POU-RO.

d. Data collection for POU shall also include flow rate, volume throughput, any occurrences of system failures or warnings, hours of operation, and date.

e. Sampling and data collection will occur on a single tap with water processed through the unit being sent to waste. Once piloting demonstrates that the single POU device can reduce the influent arsenic concentration to below the MCL for the entire study period, the PWS can proceed with the plan approval application process to permanently install this device or device(s) in or throughout the system.

5. In regard to piloting for POE:

a. For reverse osmosis units, water quality analysis and piloting for POE units will be consistent with the requirements for POU devices with the following addition: measure temperature, pH, alkalinity, TDS and calcium in order to calculate the Langlier Index prior to initiation of the study, and at the outlet at the completion of the study.

b. For adsorptive media units, follow the guidelines for POU in regard to sampling arsenic, pretreatment parameters and parameters of concern as well as sampling location and frequency.

6. All data collected during the pilot must be submitted, including any additional test results other than the minimum required above. The results should be presented to Ohio EPA in a report format.

7.2.3 Plan Approval for Non-Centralized Treatment Devices

1. Detail plans will be required to be submitted for the POU/POE devices. The plans shall be submitted in accordance with OAC Chapter 3745-91. These plans must be prepared and submitted by a professional engineer registered in the state of Ohio.

   a. These plans must contain the following information:

      i. Source of raw water, areas/buildings supplied by this source and the treatment installation locations.

      ii. A list of which taps will be treated and the number of devices to be installed. Supporting information must be provided to describe how all taps commonly used for ingestion of water were identified and selected for treatment. The plan shall ensure that a sufficient supply of treated water is readily available.

   b. The plans shall also contain pretreatment details and specifications (i.e., sodium hypochlorite feed facility) and chemical application points.

      i. Average and peak daily flow demands for the system.

      ii. Average and design flow rate at each device.

      iii. Components of, materials of and specifications for the device.

      iv. All appurtenances and piping associated with the device and plumbing necessary to retrofit into existing plumbing.

      v. Schematic of plumbing including potable water supply and process water supply and waste discharge.

      vi. Address corrosion control strategy and mitigation for waters that may become corrosive following treatment (i.e., RO permeate).

vii. Schedule for operational monitoring of the device, including frequency for recording physical measurements and inspecting the device.

c. All POU/POE devices must be equipped with a warning light or alarm or automatic shutoff device to warn owner/operator when a device is in need of maintenance.

d. All POU devices shall be installed per manufacturer's instructions.

e. The plan approval application shall include results of recent chemical and microbiological analysis for constituents that may affect the performance or maintenance of the proposed device that was conducted within 12 months of submitting the application.

f. The plan approval application must also include a maintenance schedule and description of maintenance activities for the devices. The system shall establish a rigorous maintenance schedule which will be approved by Ohio EPA. The maintenance schedule should follow the manufacturer's suggestions unless the pilot study indicates a more frequent schedule is necessary.

g. The plan must include a proposed monitoring schedule. See Compliance Monitoring schedule section below.

h. The application must include the means by which the owner/operator will make the consumer aware as to which taps are treated and should be used for ingestion purposes and which taps are not treated. These means should include posted signs above taps and educational material made available to consumers.

i. If the pilot study has not already been approved, results of the pilot study need to be submitted with the detail plan submittal.

7.2.4 Verification

Following installation of a POU or POE device, an arsenic sample must be collected and analyzed to determine that the device is working. An arsenic sample should also be taken before and after a maintenance event to ensure adequate maintenance frequency and that appropriate maintenance has occurred.

7.2.5 Maintenance for Non-Centralized Treatment

1. Determination as to when maintenance is required shall be established by a set trigger or combination of triggers. For example, flow output

through unit, high total dissolved solids reading from meter on RO unit, alarm sounding, monitoring of contaminants and/or time. After change out of cartridges, an arsenic sample shall be taken to ensure that removal is occurring and the device is in proper working order. The system must be flushed by emptying the bladder tank prior to taking a post maintenance arsenic sample to be representative of current conditions.

2. The maintenance frequency shall occur as determined by piloting or similar experience, or as suggested by the manufacturer, whichever is more frequent. For granular activated carbon cartridges, the established maintenance frequency should be at least every 6 months.

3. Following maintenance, the device needs to be flushed, preferably with water containing a chlorine residual, before the unit is put back into service for consumption. Consult with manufacturer's recommendations.

4. The public water system may conduct their own maintenance or contract out the necessary services. If done in-house, the public water system should obtain the necessary maintenance manuals from the manufacturer to provide to staff responsible for installation, operations and maintenance procedures related to the device.

5. Compliance with maintenance plans will be confirmed through records such as log sheets and receipts for maintenance services provided by labs or contractors. These records shall be kept at the facility and made available at Ohio EPA's request. A copy of the approved maintenance plan shall also be kept on site and made available to Ohio EPA.

6. In regard to POU devices specifically, most POU devices are made up of multiple cartridges: typically a pre-filter cartridge to remove any small amounts of particulates that may be in the water, a cartridge containing granular activated carbon for removal of residual chlorine and taste/odor causing constituents, and finally the arsenic removal unit. Each cartridge will likely have different replacement schedules and maintenance requirements. The maintenance schedule shall take into account these variations.

    a. For example, the GAC cartridge may need to be replaced every six months as the media becomes spent and to avoid bacterial growth in the filter.

    b. Properly operated and maintained, an RO membrane's useful life could be as long as three to five years. Cleaning of the membrane

to remove foulants is necessary to sustain the integrity of the membrane and prolong its life.

c. Pre- and post-filter cartridges must be replaced frequently enough that they do not become clogged and restrict flow or cease to function as intended.

7.2.6 Compliance Monitoring for Non-Centralized Treatment Devices

Compliance monitoring for a PWS that has installed approved POU or POE treatment devices must be done at sampling points and at a frequency specified in a monitoring plan submitted by the PWS and approved by the director of Ohio EPA (OAC rule (3745-81-23(E)(13)).

1. Compliance monitoring for POU devices is as follows:

   A PWS utilizing a single or multiple POU devices shall conduct quarterly monitoring to determine compliance with the arsenic MCL. The following monitoring schemes apply:

   a. If only one device is installed and on one tap, this tap is sampled quarterly.

   b. If two or three devices are installed to cover two or three taps, respectively, a sample for arsenic shall be collected each quarter from at least one tap for compliance purposes. Each tap shall be sampled for arsenic at least once per year for compliance.

   c. If four or more POU devices are installed to treat four or more different taps, at least 25 percent of taps are to be sampled for arsenic each quarter for compliance purposes. Each tap shall be sampled for arsenic at least once per year for compliance.

   d. If an arsenic result from a single tap exceeds the MCL, corrective maintenance or replacement of the device should occur. Any corrective maintenance performed on that device must be recorded in the maintenance log, and an arsenic sample shall be collected after the maintenance is performed. Routine compliance monitoring should continue at all other treated taps. Contact Ohio EPA DDAGW to determine if any additional samples need to be collected at the tap that exceeded the MCL.

2. Compliance monitoring for a POE device is as follows:

   a. A PWS utilizing a single or multiple POE units shall conduct quarterly monitoring at its sample monitoring point to determine

compliance with the arsenic MCL. Each POE effluent supply point will be considered its own sample monitoring point for arsenic.

b. Compliance with the maximum contaminant level for arsenic is determined by a running annual average at each sampling point. If one sampling point is in violation of the MCL, the system is in violation of the MCL.

7.2.7 Contingency Plan for Non-Centralized Treatment Devices

1. As part of the contingency plan for a POU device, spare parts and replacement cartridges should be stored on site in order to return the unit to service as soon as possible.

2. For a POE device, the system shall have a contingency plan which includes provisions for temporary disruptions in service such as storage, bottled water, spare parts and media or redundancy in design.

3. All repairs and replacements must be completed as soon as possible, but no later than 14 days after the failure of the device.

4. If a device will be inoperable for a period of time beyond normal maintenance activity, contact Ohio EPA Division of Drinking and Ground Waters. Under these temporary circumstances, bottled water may be required to be provided if water that meets the arsenic standard is not available from another tap.

5. When a device is down for repair, the system must provide a public notice that the PWS is not providing drinking water in compliance with the arsenic MCL at the affected location. The notice shall inform consumers that the water from that tap is not suitable for ingestion due to elevated arsenic concentration and direct them to alternative taps or sources that are suitable for ingestion.

7.3 Backflow Prevention for Non-Centralized Treatment Devices

Precautions shall be taken to ensure that the drinking water quality is maintained as it is delivered to the consumer. Cross connections with another water supply are not allowed unless approved by the Director. Approved backflow prevention devices may be required if a potential or actual hazards may exist in which backflow of non-treated water may enter the treated water supply.

RO POU devices shall be installed such that the concentrate waste stream is discharged to waste through an approved air gap (see OAC Rule 3745-95-01 for definition of an air gap).

CHAPTER 8

DISPOSAL OF ARSENIC RESIDUALS FROM DRINKING WATER TREATMENT PROCESSES

8.0 Waste Disposal Regulations

Waste disposal is an important consideration in the treatment selection process. The disposal options for the wastes generated by any particular treatment can affect the feasibility of that treatment as an arsenic compliance strategy. Arsenic removal technologies produce several different types of waste, including sludges, brine streams, backwash slurries, and spent media. These wastes have the potential for being classified as hazardous and can pose disposal limitations. Residual wastes are subject to the regulations which govern disposal of liquid, solid and hazardous wastes, at a federal, state and local level.

The following is for reference only, and is intended to provide the reader with a framework for arsenic waste disposal. Contact appropriate Ohio EPA district offices and divisions (DSW, DHWM, DSIWM) for all waste disposal requirements and permits.

8.1 Types of Residual Wastes Generated

The following table summarizes the types of wastes generated from various arsenic removal treatment technologies.

Table 8.1 Summary of Residuals/Management Methods[1]

Treatment Technology	Form of Residual	Type of Residual	Possible Disposal Methods
Anion Exchange	Liquid	Regeneration streams: Spent Backwash Spent Regenerant Spent Rinse Stream	Sanitary Sewer Direct Discharge Evaporation Ponds/Lagoon
	Solid	Spent Resin	Landfill Hazardous Waste Landfill Return to Vendor
Activated Alumina	Liquid	Regeneration streams: Spent Backwash Spent Regenerant (caustic) Spent Neutralization (acid) Spent Rinse Liquid Filtrate(when brine streams are precipitated)	Sanitary Sewer Direct Discharge Evaporation Ponds/Lagoon

	Solid	Spent Alumina Sludge	Landfill Hazardous Waste Landfill Land Application
Media Adsorption	Liquid	Regeneration streams: Spent Backwash Spent Regenerant Spent Rinse Stream	Sanitary Sewer Direct Discharge Evaporation Ponds/Lagoon
	Solid	Spent Media	Landfill Hazardous Waste Landfill Return to Vendor
Iron and Manganese Removal Processes	Liquid	Filter Backwash	Sanitary Sewer Direct Discharge Evaporation Ponds/Lagoon
	Solid	Sludge(if separated from backwash water) Spent Media	Sanitary Sewer Land Application Landfill Landfill Hazardous Waste Landfill
Membrane Processes	Liquid	Brine (reject and backwash streams)	Direct Discharge Sanitary Sewer Deep Well Injection Evaporation Ponds/Lagoon

1. Science Applications International Corporation (2000)

8.2 Liquid Waste Characterization and Waste Disposal Options

In general, provisions must be made for proper wastewater disposal from water treatment facilities. Permit-to-install (PTI) applications must be filed and PTIs obtained prior to any construction of the wastewater disposal system. A PTI is required for any treatment works whether it discharges direct to waters of the State or indirectly to a publically owned treatment works (POTW). A National Pollutant Discharge Elimination System (NPDES) permit will be required if there are any wastewaters discharged to waters of the State. If a liquid waste stream will be sent to a municipal sanitary waste treatment system, or POTW, approval must be obtained from the owner of the sewage treatment system and Ohio EPA's Division of Surface Water (DSW).

Consult Ohio EPA's Division of Surface Water if you are uncertain about your situation. All disposal methods must be accepted by the Division of Surface Water of the appropriate district office before initiation of the disposal practice.

If discharge to the local sewer system in contemplated, contact your Ohio EPA district representative and your POTW early in the planning phase to assure that the proposed wastewater treatment and disposal options are acceptable. Failure to do this may result in delays of the project.

8.2.1 Hazardous Waste

If the arsenic removal treatment system will produce waste streams with concentrated levels of arsenic, the PWS should consult with the hazardous waste technical assistance group at Ohio EPA, Division of Hazardous Waste Management.

Liquid waste streams must have lower concentrations than the Toxicity Characteristic (TC) in order for the waste to be classified as non-hazardous. The arsenic TC is 5.0 mg/L. Those liquid waste streams that contain more than 5.0 mg/L of arsenic would therefore be classified as a hazardous waste. Many of the arsenic removal technologies also remove other constituents (e.g., chromium). The waste stream must be analyzed for these other substances that may be in concentrations above their respective TCs.

Because of Resource Conservation and Recovery Act (RCRA) requirements and cost implications, on-site treatment or off-site disposal of hazardous waste is not likely to be feasible for small water systems. Indirect discharge may be an option since wastes that pass through a sewer system to a Publicly Owned Treatment Works (POTW) are exempt from RCRA regulation once the waste mixes with wastewater from the sewer. Utilities considering indirect discharge should work with the POTW to determine if the arsenic waste levels would be acceptable to a revised Technically Based Local Limit (TBLL). The TBLL would be revised because the arsenic treatment will change the arsenic background at the POTW.

8.2.2 Non-hazardous Waste

If a liquid waste stream is considered to be nonhazardous, the PWS can consider several options:

<u>Direct Discharges of Liquids to Surface Waters</u>
Direct discharge refers to the disposal of liquid waste streams to nearby surface waters. The primary advantage of direct discharge is reduced capital and operations and maintenance (O&M) costs due to the elimination of residuals treatment. However, the feasibility of this disposal method is subject to provisions of the NPDES and state anti-degradation regulation. A recipient of an NPDES permit will be required to pay a fee and also to conduct discharge monitoring as specified in the permit. The allowable discharge is a function of the ability of the receiving water to assimilate the arsenic without exceeding water quality criteria established under the Clean Water Act (CWA) or state regulation. Projects that receive an anti-degradation review will require four to six months minimum to complete the approval process.

Ohio EPA is authorized to implement the federal NPDES program including the pretreatment (indirect discharge) and sludge components of the program. For any direct discharge to a surface water body in Ohio, a PWS must obtain an NPDES permit from Ohio EPA's Division of Surface Water. The volume and content of any discharge allowed to a body of water will vary based on factors such as the current designated use of the water body. Ohio has developed designated uses for surface waters within the State and has established water quality criteria designed to protect those uses. The statewide surface water quality criteria and water use designations are contained in OAC rule 3745-1-07.
Aside from arsenic concentrations, brine can also be an issue for disposal as direct discharges must be below 1500 mg/L total dissolved solids. Other treatment systems residuals are evaluated on a case by case basis so as to not interfere with biological processes.

Discharge Through an Approved Sand (Red Water) Filter
Often backwash wastewater (often referred to as red water for iron removal filters) will be sent to sand filters for solids removal prior to discharge to a stream or to a sanitary sewer connection. Sand filters shall meet the criteria outlined in Chapter 4 Section 5 (B)(2)(b) of the Guidelines for Design of Small Public Ground Water Systems (Ohio EPA 2010). Additional design criteria can be found in RSWW and the booklet *Sewage Collection, Treatment and Disposal Where Public Sewers Are Not Available* published by Ohio EPA's Division of Surface Water. An NPDES permit and PTI will be required. Direct discharge water quality limits in the above section would also apply to the discharge from an approved sand (red water) filter.

Discharge Through an Approved Lagoon or Evaporative Pond
Backwash wastewater or other regenerative streams may possibly be sent to a lagoon or evaporative pond to handle the waste, where the solids are concentrated and the liquid decanted and discharged or evaporated. The design of a lagoon and evaporative pond must meet the design criteria established by the Division of Surface Water. The Division of Drinking and Ground Waters also has design criteria related to lagoons for the handling of backwash and regenerative waste streams from drinking water treatment processes which is found in RSWW Section 9.5.2. Liquid discharges from the lagoon are subject to discharge limits set by the Division of Surface Water. Contact Ohio EPA's DSW to determine allowable liquid discharge requirements. Contact the appropriate Ohio EPA division for the disposal of solids sludge (see Section 8.3 below).

Indirect Discharge to a Sanitary Sewer System (i.e., pretreatment)
The discharge of liquid waste streams to a POTW is a potential disposal alternative. In this case, the waste stream will be subject to TBLLs established regionally by sewer authorities as part of the POTW's Industrial Pretreatment Program. TBLLs are established in order to protect POTW operation, assure compliance with NPDES permits, and prevent an unacceptable level of accumulation of contaminants in the process sludge and biosolids. The arsenic limit is usually on the order of 0.05 to 0.1 mg/L. The TBLLs are computed for each POTW to take into account the background levels of contaminants in the municipal wastewater. The background level will change because of the drinking water treatment process, which may lead to revised TBLLs. The revised TBLL would be used to determine if the liquid waste stream could be discharged to the POTW.

Ohio is authorized to implement the federal pretreatment program. There is a prohibition on the indirect discharge (i.e., discharge to POTWs) of pollutants that would interfere or pass through a POTW. Individual POTW's may have their own approved pretreatment program, which must be at least as stringent as the Ohio requirements. POTW's may develop and implement specific local limits known as technically based local limits (TBLL). Such limits must ensure renewed or continued compliance with the POTW's NPDES permit or sludge use or disposal practices.

On Site Sewerage/ Underground Injection
The subsurface placement of waste fluids to on-site disposal systems such as septic systems, dry wells, leach fields, etc. is regulated under the Ohio EPA's Division of Drinking and Ground Waters Underground Injection Control (UIC) Program, and the Division of Surface Water. If a new on –site disposal system is proposed, a PTI must first be obtained from the Division of Surface Water. Any time that a new or additional waste will be discharged to an existing on-site sewerage or septic system, consult with the Ohio EPA Division of Surface Water and the UIC Program to obtain approvals. Waste (including arsenic waste) from a drinking water treatment process is considered an industrial waste under Ohio's underground injection control rules (OAC Rule 3745-34-01). A permit to operate is required for this type of underground injection, which is categorized as a Class V injection well (OAC Rule 3745-34-13(A)). Injected waste must meet all drinking water maximum contaminant limits at the point of injection in order to meet the requirements of OAC Rule 3745-34-07(A). Additional information may be found on the Ohio EPA UIC Program, Class V web page:
http://www.epa.ohio.gov/ddagw/uic_class5.aspx. Any questions should be directed to Ohio EPA, DDAGW-UIC.

Hauled Waste Disposal

A PWS may contract with a licensed waste hauler to remove liquid wastes that cannot be disposed of on-site. Installation of a holding tank is subject to Ohio EPA, DSW PTI approval.

8.3 Waste Solid Residuals Characterization and Waste Disposal Options

Waste solid residuals are subject to the Toxicity Characteristic Leaching Procedure (TCLP). This test is used to simulate the potential for leaching in a landfill setting. The TCLP leachate must be lower than any of the TC values in order for the waste to be classified as nonhazardous.

8.3.1 Hazardous Wastes

If the TCLP extract contains arsenic or any other regulated contaminant (e.g., chromium) above the TC, the waste residuals must be disposed in a designated and permitted hazardous waste landfill. These landfills are strictly regulated under RCRA and have extensive monitoring and operational guidelines. As such, the costs of disposal are relatively high. As with municipal solid waste landfill disposal, waste sludges must not contain free liquid residuals.

A critical element of hazardous waste disposal is the cradle-to-grave concept. The party responsible for generating the hazardous waste retains liability and responsibility for the fate and transport of the waste.

Ohio EPA is authorized to implement the federal RCRA program. Ohio has promulgated requirements that are consistent with the federal hazardous waste regulations. General categories of hazardous waste include listed wastes and characteristic wastes (ignitability, corrosivity, reactivity, or toxicity characteristic). Ohio imposes the same toxicity characteristic leachate procedure (TCLP) standard for arsenic imposed under federal regulations (i.e., 5.0 mg/L). Ohio provides that before placing a hazardous waste in or on a land treatment facility, the owner or operator must determine the concentrations in the waste of any substances which exceed toxicity characteristic leachate procedure (TCLP) levels. Land ban disposal restriction may impose additional treatment requirements upon the waste prior to disposal. The regulations provide cradle-to-grave responsibility for generators of hazardous waste. It is likely that hazardous waste generated from water treatment plant residuals would place the water system in the Small Quantity Generator Status category, which imposes limits on amount of waste generated and storage time. A uniform hazardous waste manifest is required to accompany shipments.

To learn more about the hazardous waste rules and your responsibilities as a hazardous waste generator, see the Generator Handbook, http://www.epa.ohio.gov/portals/32/pdf/gen_handbook.pdf.

8.3.2 Non-Hazardous Waste Solid Residuals

Wastes that have been deemed nonhazardous have the following options for disposal:

Solid Waste Landfills
Historically, municipal solid waste landfills have been commonly used for the disposal of nonhazardous solid wastes emanating from treatment processes. However, the hazard potential of arsenic may limit the feasibility of this alternative.

Ohio EPA DSIWM regulates municipal, industrial, residual and construction and demolition debris landfills. Several materials are restricted from disposal at sanitary landfills such as hazardous wastes and semi-solid material containing free liquid. Semi-solid material containing free liquid is determined by results obtained from conducting Method 9095 (1996)(Paint Filter Liquids test) in SW-846, Third edition: "Test Methods for Evaluating Solid Wastes, Physical/Chemical Methods," on the semi-solid material. The owner or operator of a sanitary landfill may obtain prior written authorization from Ohio EPA to dispose of this semi-solid material in the facility. Any solid wastes generated by removal of arsenic from drinking water should be screened with a TCLP test to determine if it is a hazardous waste. Contact Ohio EPA DSIWM - Processing and Engineering unit for solid waste disposal requirements and restrictions.

Land Application
Land application of concentrated sludge may be allowed under very limited conditions depending on the state law and regulations. Ohio requires that the sludge must have some type of agronomic value and that a permit be obtained from DSW for land application of sludge. Since the type of sludge generated is of an industrial type, an agronomic benefit will be hard to demonstrate.

REFERENCES

AwwaRF. 2005. *POU/POE Implementation Feasibility Study for Arsenic Treatment*, R. Narasimhan, S. Addepally, K. Martin, S. Kommineni, J. Lowry. Awwa Research Foundation, Denver, CO.

Division of Drinking and Ground Waters, Ohio EPA. 2010. *Guidelines for Design of Small Public Ground Water Systems, Fourth edition*.

Division of Hazardous Waste Management, Ohio EPA's Central Office. 2005. Consultation regarding hazardous waste residual handling.

Division of Solid and Infectious Waste Management, Ohio EPA's Central Office. 2005. Consultation regarding solid waste residual handling.

Division of Surface Water, Ohio EPA's Northeast District Office. 2005. Consultation regarding liquid waste residuals handling.

Ghurye, Ganesh and Clifford, Dennis. 2001. *Laboratory Study on the Oxidation of Arsenic III to Arsenic V*. EPA/600/R-01/021.

Great Lakes-Upper Mississippi River Board of State and Provincial Public Health and Environmental Managers. 2007. *Recommended Standards for Water Works*, Health Educations Services, Albany, NY.

Hoffman, Gary, P.E. 2006. *Design Manual - Removal of Arsenic from Drinking Water Supplies by Iron Removal Process*, U.S. EPA/600/R-06/030.

NSF International. 2004a. *NSF International Standard/American National Standard for Drinking Water Treatment Units for Drinking Water Treatment Units - Health Effects, Standard 53*.

NSF International. 2004b. *NSF International Standard/American National Standard for Drinking Water Treatment Units – Reverse osmosis drinking water systems, Standard 58*.

NSF International. 2004c. *NSF International Standard/American National Standard for Drinking Water Treatment Units for Drinking Water Treatment Units – Drinking water distillation systems, Standard 62*.

Ohio Administrative Code (OAC) 3745-81-11, 3745-81-19, 3745-81-23.

Rubel, Frederick, Jr. 2003a. *Design Manual- Removal of Arsenic from Drinking Water Supplies by Adsorptive Media,* EPA 600/R-03/019.

Rubel, Frederick, Jr. 2003b. *Design Manual- Removal of Arsenic from Drinking Water Supplies by Ion Exchange,* EPA 600/R-03/080.

Selvin N., Messham G., Simms J., Pearson I., and Hall J. 2000. *The Development of Granular Ferric Media – Arsenic Removal and Additional Uses in Water Treatment*. Proceedings of the AWWA Water Quality Technology Conference, Salt Lake City.

Science Applications International Corporation. 2000. *Regulations on the Disposal of Arsenic Residuals from Drinking Water Treatment Plants,* EPA/600/R-00/025.

Sorg, T.J. 2002. *Iron Treatment for Arsenic Removal Neglected*, Opflow, AWWA, 28(11): 15.

United States Environmental Protection Agency. 2006. *Point-of-Use or Point-of-Entry Treatment Options for Small Drinking Water Systems*, EPA 815-R-06-010.

United States Environmental Protection Agency. 2003. *Arsenic Treatment Technology Evaluation Handbook for Small Systems*, EPA 816/R-03/014.

United States Environmental Protection Agency. 2002. *Draft Guidance on Implementing a Point-of-Use or Point-of-Entry Treatment Strategy for Compliance with the Safe Drinking Water Act*, EPA xxxx02xxx DRAFT.

Wang, Lili, Abraham Chen, and Keith Fields. 2000. *Arsenic Removal from Drinking Water by Ion Exchange and Activated Alumina Plants,* EPA 600/R-00/088.

Appendix A:

ATTEHSS Optimization Decision Trees 2a, 2b and 2c (USEPA 2003)

Tree 2a
Optimization of Enhanced Coagulation/Filtration

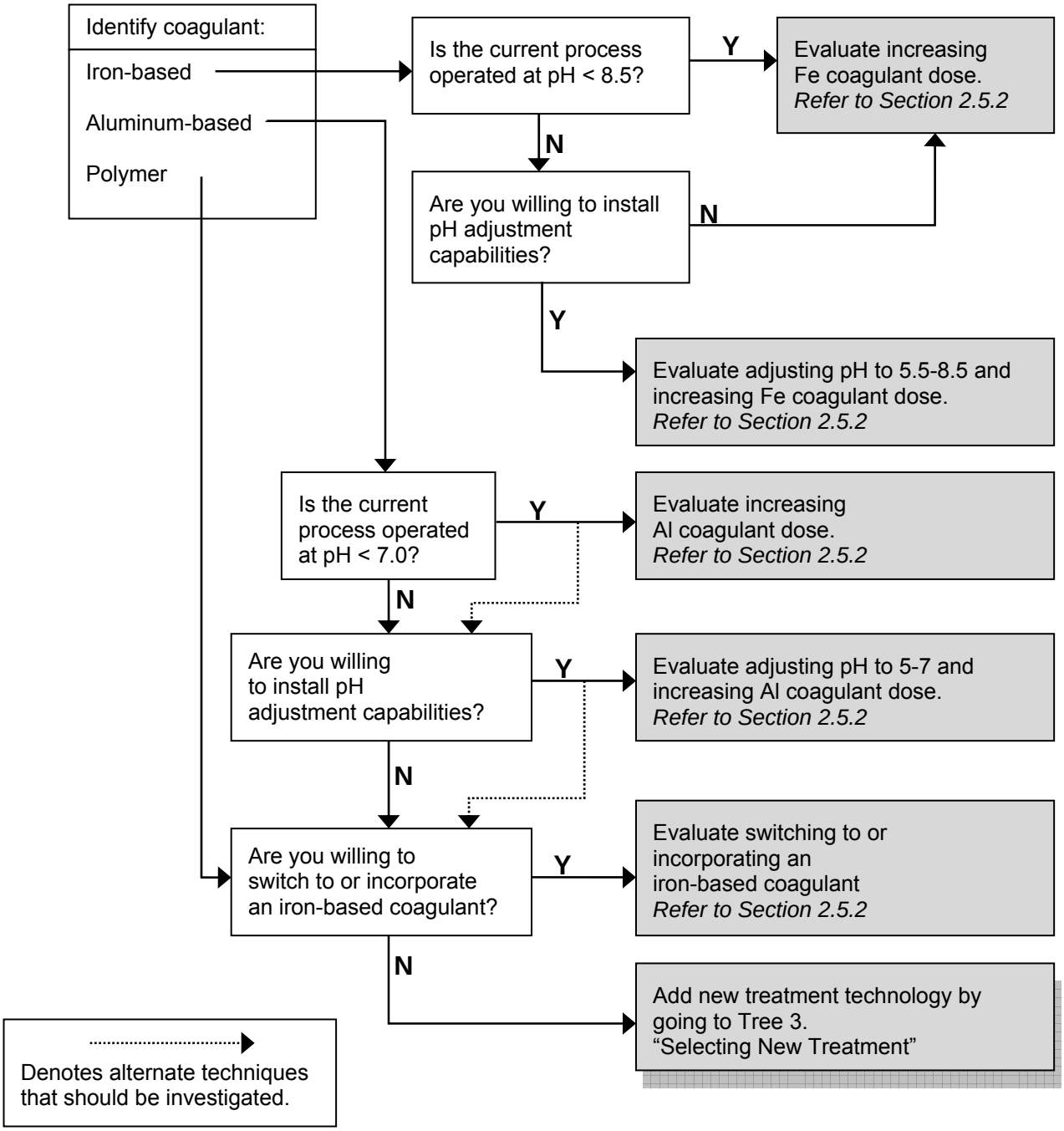

Reproduced from USEPA's *Arsenic Treatment Technology Evaluation Handbook for Small Systems*, pg. 46 (EPA 816/R-03/014)

Tree 2b
Optimization of Enhanced Lime Softening

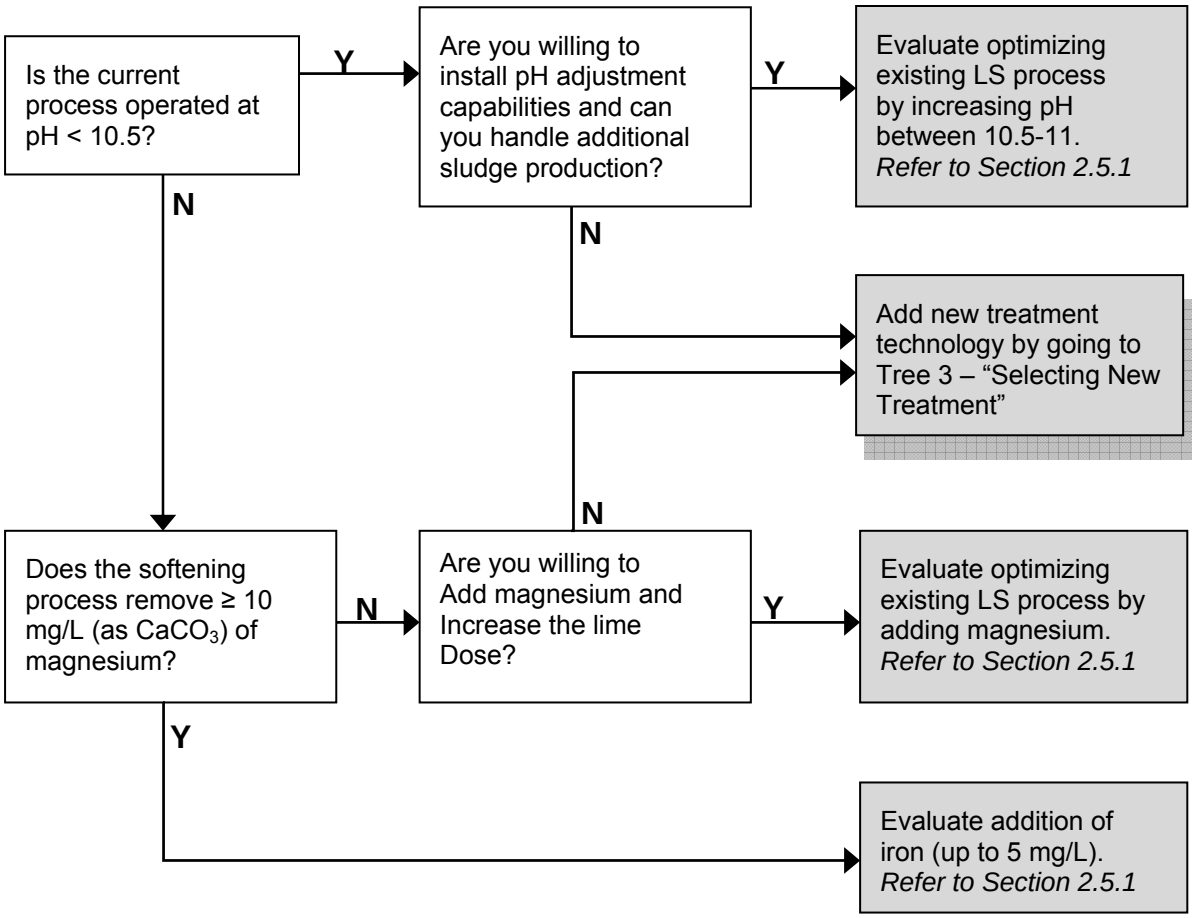

Reproduced from USEPA's *Arsenic Treatment Technology Evaluation Handbook for Small Systems*, pg. 47 (EPA 816/R-03/014)

Tree 2c
Optimization of Iron & Manganese Filtration

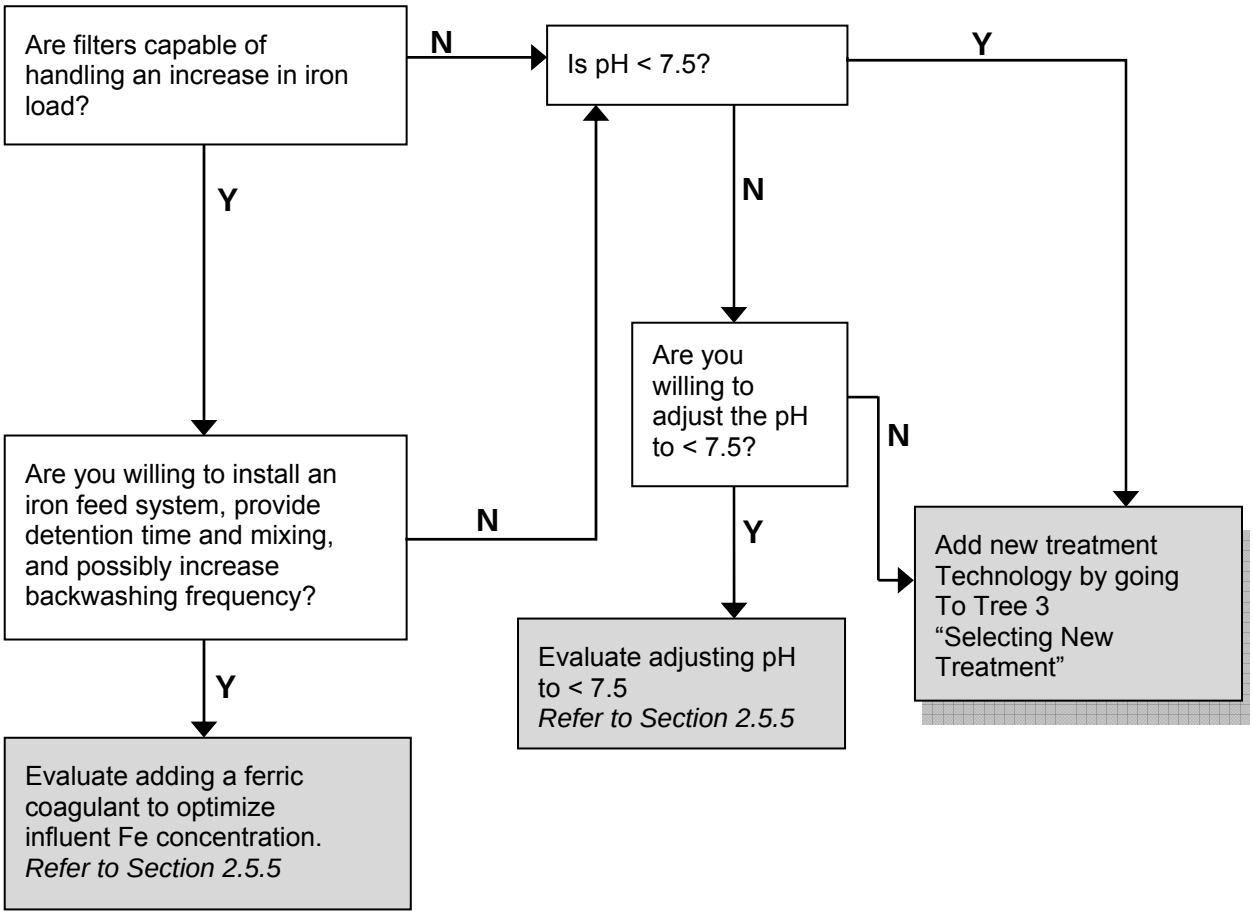

Reproduced from USEPA's *Arsenic Treatment Technology Evaluation Handbook for Small Systems*, pg. 48 (EPA 816/R-03/014)

Appendix B:

ATTEHSS Comparative Table of Arsenic Treatment Technologies (USEPA 2003)

Table ES-1. Arsenic Treatment Technologies Summary Comparison. (1 of 2)

Factors	Sorption Processes			Membrane Processes
	Ion Exchange	**Activated Alumina [A]**	**Iron Based Sorbents**	**Reverse Osmosis**
	IX	**AA**	**IBS**	**RO**
USEPA BAT [B]	Yes	Yes	No [C]	Yes
USEPA SSCT [B]	Yes	Yes	No [C]	Yes
System Size [B,D]	25-10,000	25-10,000	25-10,000	501-10,000
SSCT for POU [B]	No	Yes	No [C]	Yes
POU System Size [B,D]	–	25-10,000	25-10,000	25-10,000
Removal Efficiency	95% [E]	95% [E]	up to 98% [E]	> 95% [E]
Total Water Loss	1-2%	1-2%	1-2%	15-75%
Pre-Oxidation Required [F]	Yes	Yes	Yes [G]	Likely [H]
Optimal Water Quality Conditions	pH 6.5 – 9 [E] < 5 mg/L NO_3^- [I] < 50 mg/L SO_4^{2-} [J] < 500 mg/L TDS [K] < 0.3 NTU Turbidity	pH 5.5 – 6 [I] pH 6 – 8.3 [L] < 250 mg/L Cl^- [I] < 2 mg/L F^- [J] < 360 mg/L SO_4^{2-} [K] < 30 mg/L Silica [M] < 0.5 mg/L Fe^{+3} [I] <0.05 mg/L Mn^{+2} [I] < 1,000 mg/L TDS [K] < 4 mg/L TOC [K] < 0.3 NTU Turbidity	pH 6 – 8.5 < 1 mg/L PO_4^{-3} [N] < 0.3 NTU Turbidity	No Particulates
Operator Skill Required	High	Low [A]	Low	Medium
Waste Generated	Spent Resin, Spent Brine, Backwash Water	Spent Media, Backwash Water	Spent Media, Backwash Water	Reject Water
Other Considerations	Possible pre & post pH Adjustment Pre-filtration required. Potentially hazardous brine waste. Nitrate peaking. Carbonate peaking affects pH.	Possible pre & post pH adjustment. Pre-filtration may be required. Modified AA available.	Media may be very expensive. [O] Pre-filtration may be required.	High water loss (15-75% of feed water)
Centralized Cost	Medium	Medium	Medium	High
POU Cost	–	Medium	Medium	Medium

[A] Activated alumina is assured to operate in a non-regenerated mode.
[B] USEPA, 2002a.
[C] IBS's track record in the US was not established enough to be considered as Best Available Technology (BAT) or Small System Compliance Technology (SSCT) at the time the rule was promulgated.
[D] Affordable for systems with the given number of people served.
[E] USEPA, 2000.
[F] Pre-oxidation only required for As(III).
[G] Some iron based sorbents may catalyze the As(III) to As(V) oxidation and therefore would not require a pre-oxidation step.
[H] RO will remove As(III), but its efficiency is not consistent and pre-oxidation will increase removal efficiency.
[I] AwwaRF, 2002.
[J] Kempic, 2002.
[K] Wang, 2000.
[L] AA can be used economically at higher pHs, but with a significant decrease in the capacity of the media.
[M] Clifford, 2001.
[N] Turnalo, 2002.
[O] With increased domestic use, IBS cost will significantly decrease.

Reproduced from USEPA's *Arsenic Treatment Technology Evaluation Handbook for Small Systems*, pg. *iv* (EPA 816/R-03/014)

Table ES-1. Arsenic Treatment Technologies Summary Comparison. (2 of 2)

Factors	Precipitative Processes				
	Enhanced Lime Softening	**Enhanced (Conventional) Coagulation Filtration**	**Coagulation-Assisted Micro-Filtration**	**Coagulation-Assisted Direct Filtraiton**	**Oxidation Filtration**
	LS	**CF**	**CMF**	**CADF**	**OxFilt**
USEPA BAT [B]	Yes	Yes	No	Yes	Yes
USEPA SSCT [B]	No	No	Yes	Yes	Yes
System Size [B,D]	25-10,000	25-10,000	500-10,000	500-10,000	25,-10,000
SSCT for POU [B]	No	No	No	No	No
POU System Size [B,D]	–	–	–	–	–
Removal Efficiency	90% [E]	95% (w/ $FeCl_3$) [E] $^{<}$90% (w/Alum) [E]	90% [E]	90% [E]	50-90% [E]
Total Water Loss	0%	0%	5%	1-2%	1-2%
Pre-Oxidation Required [F]	Yes	Yes	Yes	Yes	Yes
Optimal Water Quality Conditions	pH 10.5 – 11 [I] > 5 mg/L Fe^{+3} [I]	pH 5.5 – 8.5 [P]	pH 5.5 – 8.5 [P]	pH 5.5 – 8.5 [P]	pH 5.5 – 8.5 >0.3 mg/L Fe FeAs Ratio > 20:1
Operator Skill Required	High	High	High	High	Medium
Waste Generated	Backwash Water, Sludge (high volume)	Backwash Water, Sludge	Backwash Water, Sludge	Backwash Water, Sludge	Backwash Water, Sludge
Other Considerations	Treated water requires pH adjustment.	Possible pre & post pH adjustment.	Possible pre & post pH adjustment.	Possible pre & post pH adjustment.	None.
Centralized Cost	Low [Q]	Low [Q]	High	Medium	Medium
POU Cost	N/A	N/A	N/A	N/A	N/A

[B] USEPA, 2002a.
[D] Affordable for systems with the given number of people served.
[E] Depends on arsenic and iron concentrations.
[F] Pre-oxidation only required for As(III).
[I] AwwaRF, 2002.
[P] Fields, et al., 2002a.
[Q] Costs for enhanced LS and enhanced CF are based on modification of an existing technology. Most small systems will not have this technology in place.

Reproduced from USEPA's *Arsenic Treatment Technology Evaluation Handbook for Small Systems*, pg. *v* (EPA 816/R-03/014)

Appendix C:

ATTEHSS Oxidation Methods, Table 5-2 (USEPA 2003)

Comparison of Pre-Oxidation Alternatives

Table 5-2 provides a review of issues pertinent to the five pre-oxidation methods previously discussed.

Table 5-2. Comparison of Pre-Oxidation Alternatives.

Criteria	Liquid Sodium Hypochlorite System	On-Site Hypochlorite Generation System	Permanganate Solution Feed System	Ozone Generation	Solid Oxidant System
Safety and Regulatory Issues	• HazMat regulations for safety and handling apply. • Potential for corrosive vapors in the presence of moisture. • Emergency response plan required with local fire department. • Secondary contaminant required.	• Below 1% threshold for hazardous classification. • Exempt from HazMat regulations. • No secondary containment requirements.	• Solid permanganate poses dust and inhalation hazard.	• Poisonous and reactive gas.	• None
Space Requirements	• Space requirements are small, assuming the Uniform Fire Code (UFC) exempt criteria are met.	• Space requirements are large. There must be room for salt storage, brine tanks, hypochlorite holding tanks, electrolytic equipment, as well as instrumentation & control and power.	• Space requirements are small. Additional space may be required for storage of solid permanganate.	• Space requirements are small.	• Space requirements are small.
Chemical Characteristics	• 5¼ or 12½% sodium hypochlorite solution. Degrades over time. • Decay of solution creates chlorate byproduct. • Increases pH of water slightly.	• Stable sodium hypochlorite solution (0.8%). • Constant, application concentration. • Chlorate formation low to none. • Increases pH of water slightly.	• Stable permanganate solution, generally 3-4%. • Reacts rapidly with dissolved organics.	• Gas • Very strong oxidizer.	• Solid • Requires dissolved oxygen in the water.
Chemical Delivery	• Liquid hypochlorite delivered by tanker truck, 55-gal drum, or 5-gal pail.	• Salt delivered in 50-lb bags of 2000-lb totes.	• Solid permanganate available in 25-kg pails, 50-kg kegs, and 150-kg drums.	• N/A	• N/A
Labor	• Periodic delivery. • Dilution procedures.	• Salt delivery. • Weekly loading of salt into brine tank.	• Load dry feeder. • Dilution procedures.	• N/A	• N/A
Operation and Maintenance	• Low day-to-day O&M. Long-term material maintenance could be a problem because of corrosive effects of liquid hypochlorite.	• Moderate O&M, mainly associated with salt handling. Change electrode cells every five years.	• Low day-to-day O&M for automated systems. • Stains everything purple.	• Low day-to-day O&M.	• Low day-to-day O&M.
Off-Normal Operation	• A temporary bleach solution can be mixed in the storage tank.	• A temporary bleach solution can be mixed in the day tank.	• N/A	• N/A	• N/A
Community Relations	• HazMat signage required.	• No HazMat regulations. Hydrogen byproduct vented to atmosphere.	• N/A	• N/A	• N/A

Reproduced from USEPA's *Arsenic Treatment Technology Evaluation Handbook for Small Systems*, pg. 93 (EPA 816/R-03/014)

Appendix D:

USEPA Design Manual for Adsorptive Media, Figure 3.5
Treatment Bed and Vessel Design Calculation

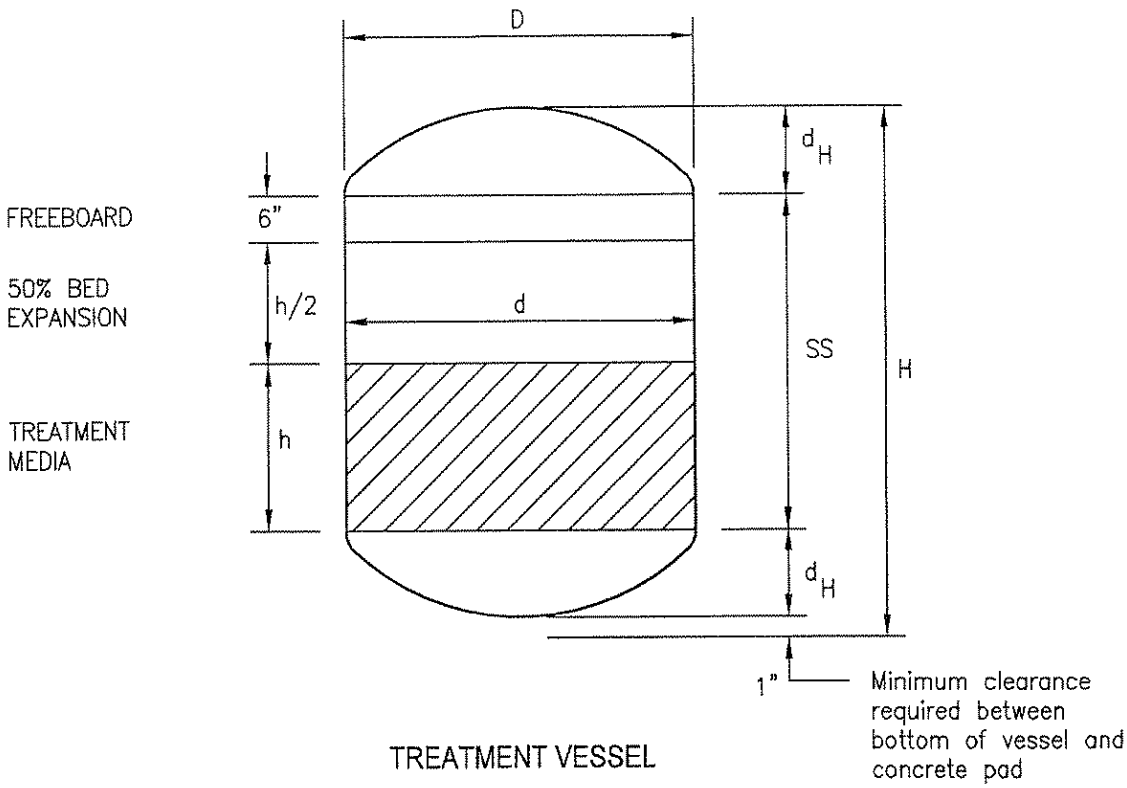

SYMBOLS

q – TREATED WATER FLOW RATE (gpm)

d – TREATMENT BED DIAMETER (ft.), $d = \sqrt{4V/\pi h}$

h – TREATMENT BED DEPTH (ft.)

V – TREATMENT BED VOLUME – $\frac{\pi d^2 h}{4}$ (ft.^{3})

M_d – DENSITY OF TREATMENT MEDIA (lb./ft.^{3})

M_W – WEIGHT OF MEDIA (lbs.)

D – OUTSIDE DIAMETER OF TREATMENT VESSEL (ft.)

d_H – DEPTH OF DISHED PRESSURE HEAD (ft.)

H – OVERALL HEIGHT OF SKID MOUNTED TREATMENT VESSEL (ft.)

SS – STRAIGHT SIDE (ft.)

GIVEN

$d > h/2$, 3'–0" < h < 6'–0"

$H = 2\ d_H + h + h/2 + 6" + 1"$

$D = d + 1"$

$M_d = 45$ lb./ft^3 (VARIES WITH MEDIA IN VESSEL)

$M_W = M_d \times V = 45V$ (lb.)

Figure 3-5. Treatment Bed and Vessel Design Calculations

Reproduced from USEPA's *Design Manual-Removal of Arsenic from Drinking Water Supplies by Adsorptive Media*, pg. 16 (EPA 600/R-03/019)

Appendix E:

USEPA Design Manual for Adsorptive Media, Adsorptive Media Schematics

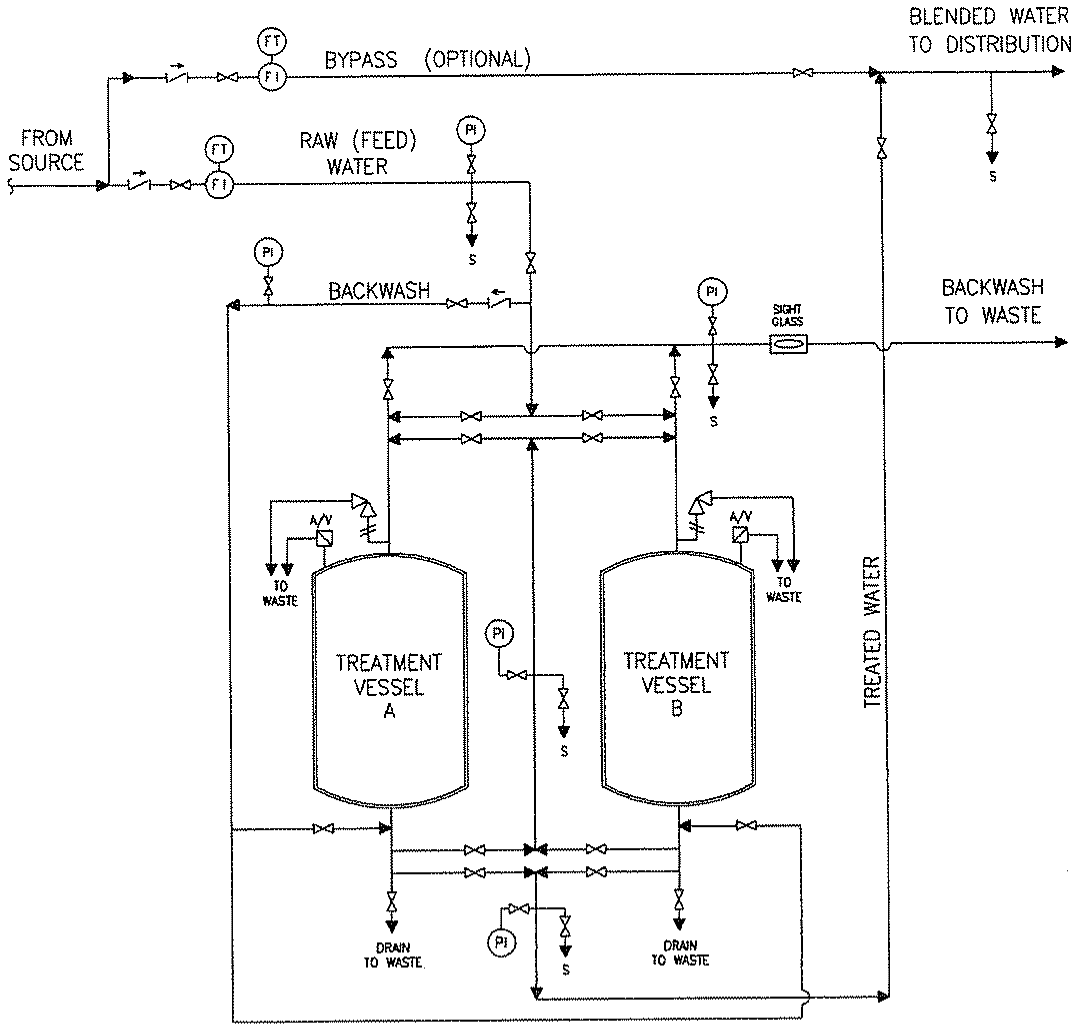

SYMBOL LEGEND

- PROCESS CONTROL VALVE
- CHECK VALVE
- pH SENSOR/ANALYZER
- FLOW INDICATOR
- FLOW TOTALIZER
- PRESSURE INDICATOR
- PRESSURE RELIEF VALVE
- AIR/VACUUM VALVE
- S SAMPLE

Figure 3-2. Flow Diagram for Dual Vessel Series Downflow Treatment System Without pH Adjustment, With Replacement of Spent Media

Reproduced from USEPA's *Design Manual-Removal of Arsenic from Drinking Water Supplies by Adsorptive Media*, pg. 13 (EPA 600/R-03/019)

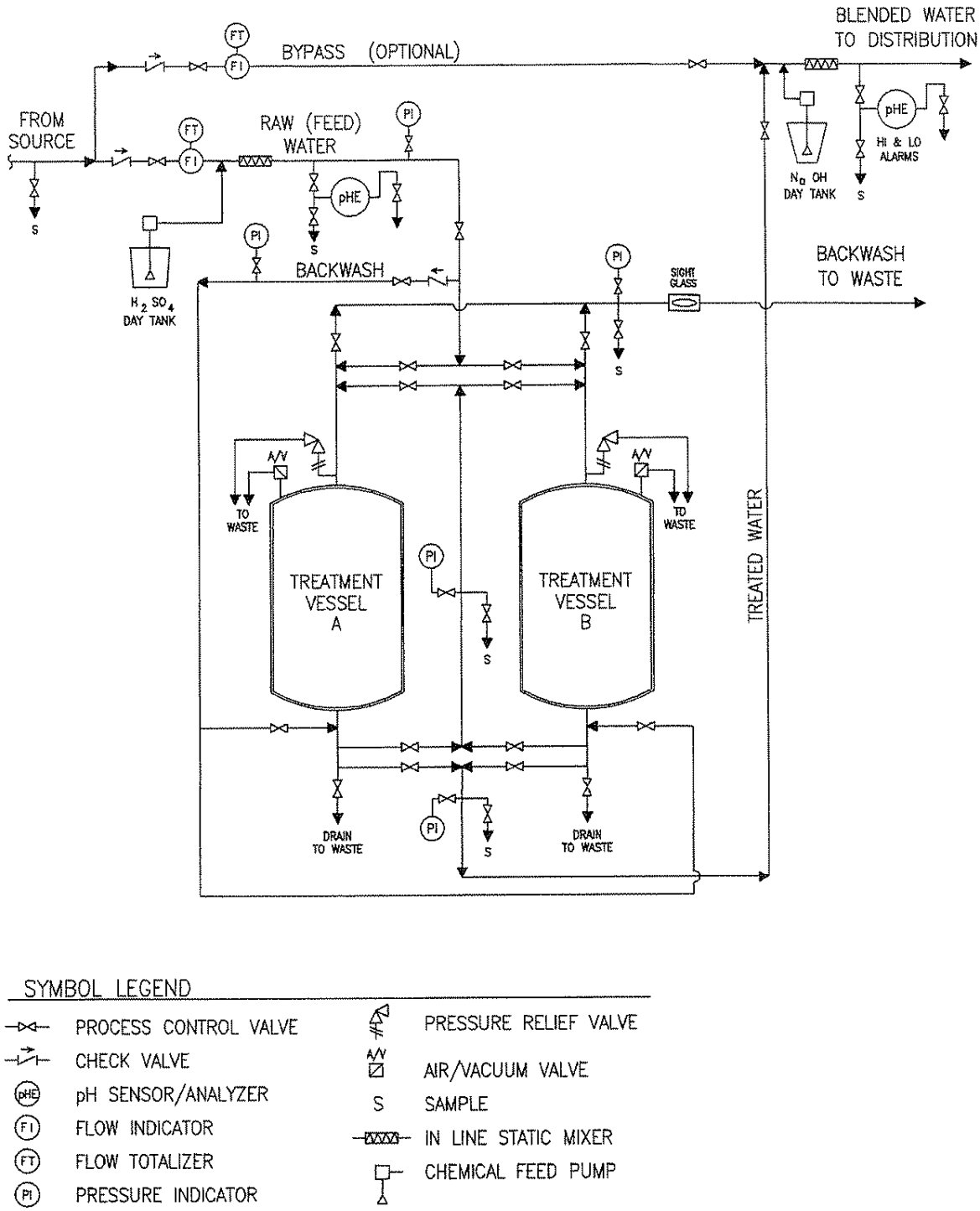

Figure 3-3. Flow Diagram for Dual Vessel Series Downflow Treatment System With pH Adjustment, With Replacement of Spent Media

Reproduced from USEPA's *Design Manual-Removal of Arsenic from Drinking Water Supplies by Adsorptive Media*, pg. 14 (EPA 600/R-03/019)

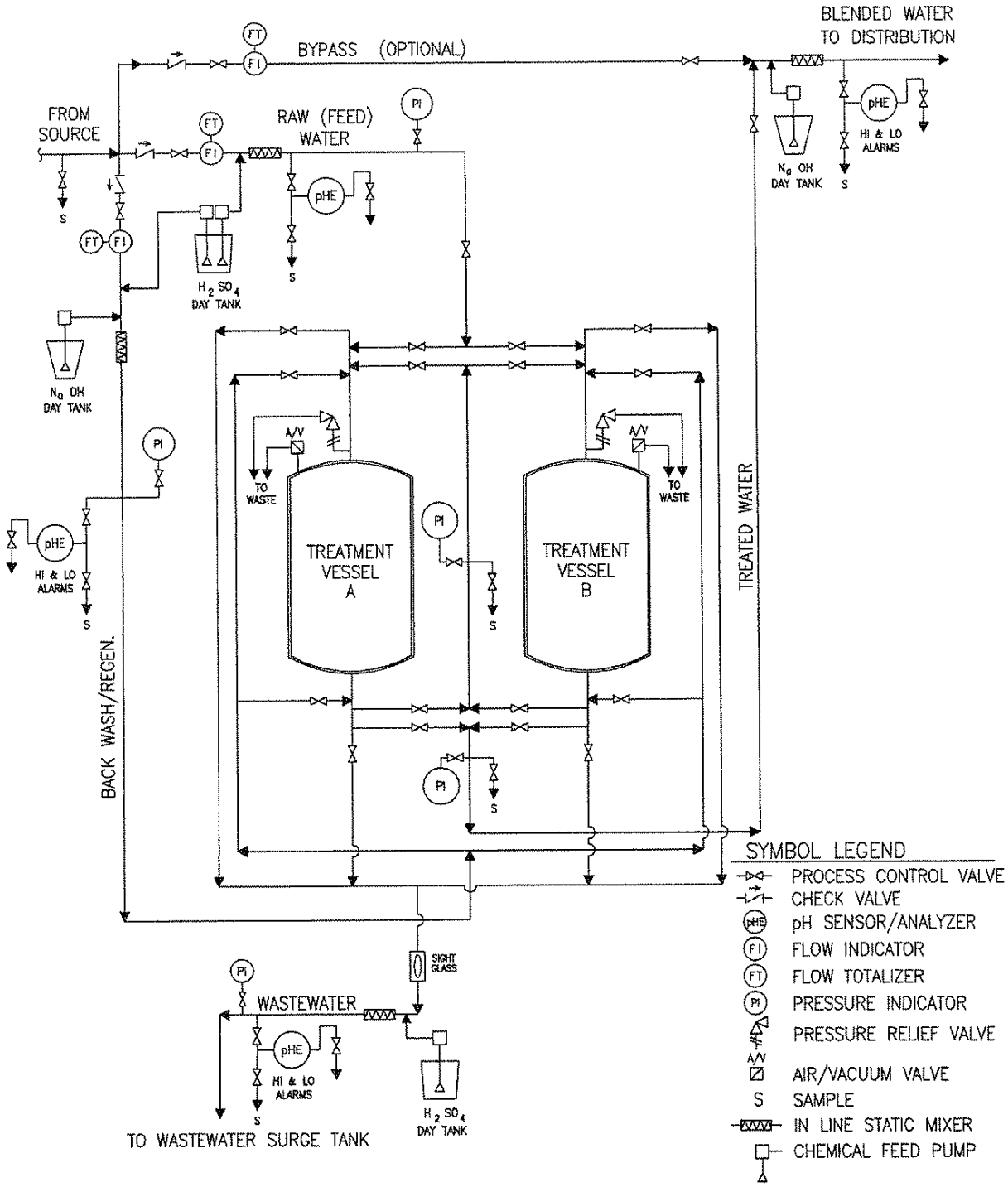

Figure 3-4. Flow Diagram for Dual Vessel Series Downflow Treatment System With pH Adjustment, With Regeneration of Spent Media

Reproduced from USEPA's *Design Manual-Removal of Arsenic from Drinking Water Supplies by Adsorptive Media*, pg. 15 (EPA 600/R-03/019)

Appendix F:

USEPA Design Manual for Ion Exchange, Ion Exchange Design Calculations and Schematics

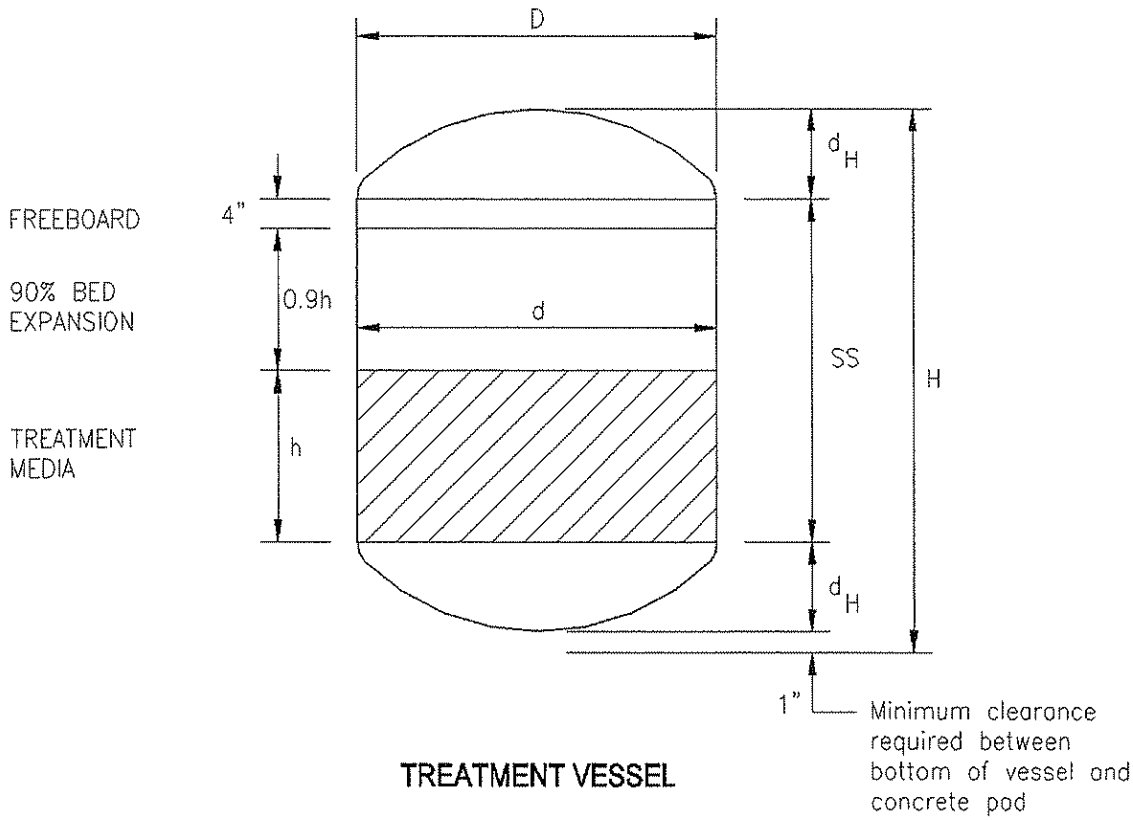

TREATMENT VESSEL

SYMBOLS

q – TREATED WATER FLOW RATE (gpm)

d – TREATMENT BED DIAMETER (ft.), $d = \sqrt{4V/\pi h}$

h – TREATMENT BED DEPTH (ft.)

V – TREATMENT BED VOLUME – $\frac{\pi d^2 h}{4}$ ($ft.^3$)

$EBCT = \frac{V}{q}$

M_d – DENSITY OF TREATMENT MEDIA ($lb./ft.^3$)

M_W – WEIGHT OF MEDIA (lbs.)

D – OUTSIDE DIAMETER OF TREATMENT VESSEL (ft.)

d_H – DEPTH OF DISHED PRESSURE HEAD (ft.)

H – OVERALL HEIGHT OF TREATMENT VESSEL (ft.)

SS – STRAIGHT SIDE (ft.)

GIVEN

$d > h/2$, $2'-6" < h < 6'-0"$

$H = 2\ d_H + h + 0.9h + 6" + 1"$

$D = d + 1"$

$M_d = 42\ lb./ft^3$ (VARIES WITH ION EXCHANGE RESIN)

$M_W = M_d \times V = 42V$ (lb.)

Figure 3-3. Treatment Bed and Vessel Design Calculations

Reproduced from USEPA's *Design Manual-Removal of Arsenic from Drinking Water Supplies by Ion Exchange*, pg. 16 (EPA 600/R-03/080)

Reproduced from USEPA's *Design Manual-Removal of Arsenic from Drinking Water Supplies by Ion Exchange*, pg. 13 (EPA 600/R-03/080)

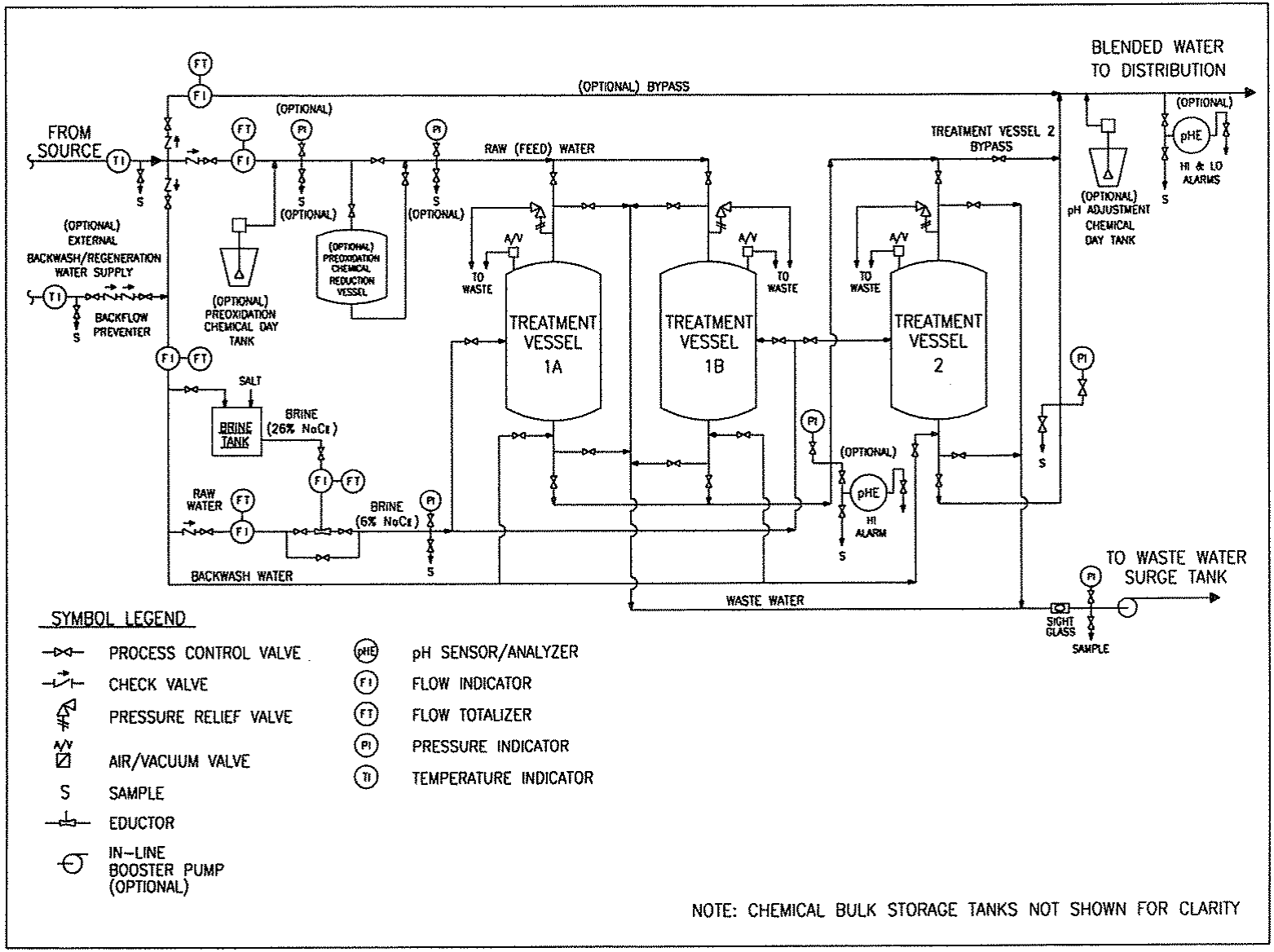

Figure 3-2. Ion Exchange Treatment System Flow Diagram

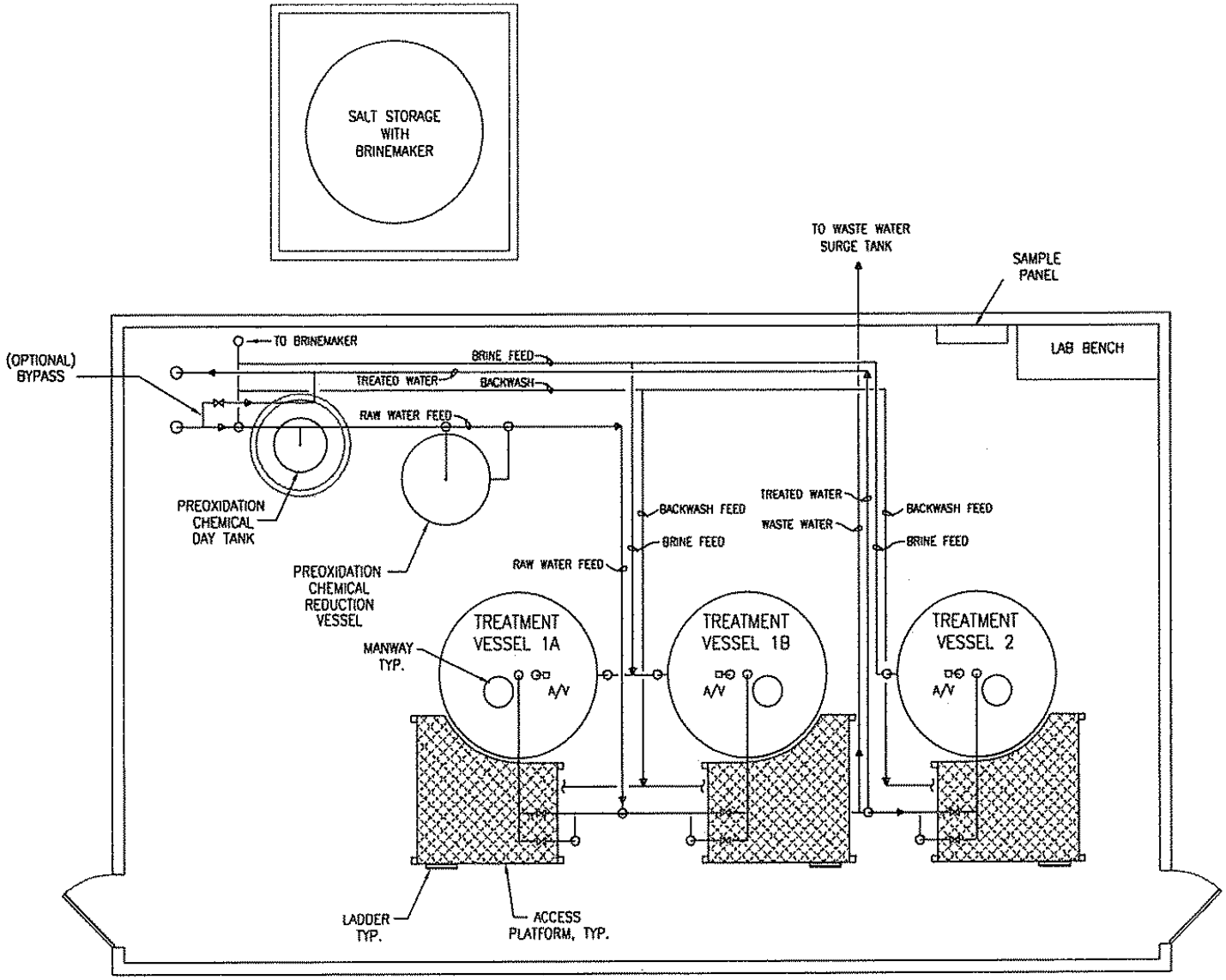

Figure 3-4. Treatment System Plan (see Figure 3-2 for symbol legend)

Reproduced from USEPA's *Design Manual-Removal of Arsenic from Drinking Water Supplies by Ion Exchange*, pg. 17 (EPA 600/R-03/080)