Oregon Clean Energy Center

Lucas County, Oregon, Ohio

Application for Prevention of Significant Deterioration Preconstruction Permit

Submitted by:

Oregon Clean Energy, LLC
20 Park Plaza, Suite #471
Boston, MA 02116

ARCADIS

One Executive Drive
Suite 303
Chelmsford, MA 01824

August 2012

1. Introduction **1-1**

1.1 Project Overview 1-1

1.2 Regulatory Overview 1-2

1.3 Application Overview 1-2

1.3.1 Application Organization 1-2

1.3.2 Application Contacts 1-3

2. Project Description **2-1**

2.1 Overview 2-1

2.2 Site Location 2-1

2.3 Combined Cycle Combustion Turbines 2-2

2.3.1 Combustion Turbine Generators 2-2

2.3.2 Heat Recovery Steam Generators and Duct Burners 2-3

2.3.3 Steam Turbine Generator 2-3

2.3.4 Cooling Tower 2-3

2.4 Air Pollution Control Equipment 2-3

2.4.1 Selective Catalytic Reduction 2-4

2.4.2 Oxidation Catalyst 2-4

2.5 Ancillary Equipment 2-4

2.5.1 Auxiliary Boiler 2-5

2.5.2 Emergency Diesel Generator 2-5

2.5.3 Emergency Diesel Fire Pump 2-5

2.5.4 Aqueous NH_3 Storage Tank 2-5

2.6 Emissions Estimates 2-5

2.6.1 Combined Cycle Combustion Turbine Emissions – Steady State Operation 2-7

2.6.2 Combined Cycle Combustion Turbine Emissions – Start-up and Shutdown Operations 2-8

2.6.3 Ancillary Equipment 2-10

2.6.4 Potential Annual Emissions 2-11

3. Regulatory Applicability Evaluation 3-1

3.1 PSD New Source Review 3-1

3.1.1 Best Available Control Technology 3-2

3.1.2 Air Quality Impact Analysis 3-2

3.1.3 PSD Class I Area Impact Analysis 3-3

3.1.4 Additional Impact Analyses 3-4

3.2 New Source Performance Standards 3-5

3.2.1 40 CFR 60 – Subpart A – General Provisions 3-5

3.2.2 40 CFR 60 – Subpart KKKK – Stationary Combustion Turbines 3-5

3.2.3 40 CFR 60 – Subpart Dc – Small Industrial-Commercial-Institutional Steam Generating Units 3-6

3.2.4 40 CFR 60 – Subpart IIII – Stationary Compression Ignition Internal Combustion Engines 3-6

3.3 State of Ohio Best Available Technology 3-7

3.4 Operating Permit 3-8

3.5 National Emission Standards for Hazardous Air Pollutants (40 CFR Parts 61 and 63) 3-9

3.6 Acid Rain Program 3-10

3.7 Cross-State Air Pollution Rule 3-10

3.8 State Regulations 3-11

4. Control Technology Evaluation – BACT/BAT 4-1

4.1 Regulatory Applicability of Control Requirements 4-1

4.1.1 PSD Pollutants Subject to BACT/BAT 4-1

4.1.2 Emission Units Subject to BACT Analyses 4-2

4.2 BACT Analysis Approach 4-2

4.2.1 Best Available Control Technology 4-2

4.2.1.1 Identification of Technically Feasible Control Options 4-2

4.2.1.2 Economic (Cost-Effectiveness) Analysis 4-3

4.2.1.3 Energy Impact Analysis 4-3

4.2.1.4 Environmental Impact Analysis 4-4

4.3 BACT Analysis for NO_x 4-4

4.3.1 Identification of Control Options 4-5

4.3.2 Search of RBLC Determinations 4-6

4.3.2.1 Combustion Turbine Generators and Duct Burners 4-6

4.3.2.2 Auxiliary Boiler 4-6

4.3.3 BACT Determinations 4-7

4.3.3.1 Combustion Turbine Generators and Duct Burners 4-7

4.3.3.2 Auxiliary Boiler 4-7

4.4 BACT Analysis for VOC 4-7

4.4.1 Identification of Control Options 4-8

4.4.2 Search of RBLC Determinations 4-8

4.4.2.1 Combustion Turbine Generators and Duct Burners 4-8

4.4.2.2 Auxiliary Boiler 4-9

4.4.3 BACT Determinations 4-9

4.4.3.1 Combustion Turbine Generators and Duct Burners 4-9

4.4.3.2 Auxiliary Boiler 4-9

4.5 BACT Analysis for CO 4-9

4.5.1 Identification of Control Options 4-10

4.5.2 Search of RBLC Determinations 4-10

4.5.2.1 Combustion Turbine Generators and Duct Burners 4-10

4.5.2.2 Auxiliary Boiler 4-11

4.5.3 BACT Determinations 4-12

4.5.3.1 Combustion Turbine Generators and Duct Burners 4-12

4.5.3.2 Auxiliary Boiler 4-12

4.6 BACT Analysis for Particulate Matter (PM_{10}/$PM_{2.5}$) 4-12

4.6.1 Search of RBLC Determinations 4-13

4.6.1.1 Combustion Turbine Generators and Duct Burners 4-13

4.6.1.2 Auxiliary Boiler 4-13

4.6.1.3 Wet Cooling Tower 4-13

4.6.2 BACT Determinations 4-14

4.6.2.1 Combustion Turbine Generators and Duct Burners 4-14

4.6.2.2 Auxiliary Boiler 4-14

4.6.2.3 Wet Cooling Tower 4-14

4.7 BACT Analysis for Sulfur Dioxide and Sulfuric Acid 4-14

4.7.1 Search of RBLC Determinations 4-15

4.7.1.1 Combustion Turbine Generators and Duct Burners 4-15

4.7.1.2 Auxiliary Boiler 4-15

4.7.2 BACT Determinations 4-16

4.7.2.1 Combustion Turbine Generators and Duct Burners 4-16

4.7.2.2 Auxiliary Boiler 4-16

4.8 BACT Analysis for Greenhouse Gases 4-16

4.8.1.1 Search of RBLC Determinations 4-19

4.9 Emission Limit and Control Technology Summaries 4-20

5. References 5-1

List of Tables

TABLE 1-1: SUMMARY OF PROPOSED POTENTIAL EMISSIONS AND APPLICABLE REGULATORY THRESHOLDS 1-2
TABLE 2-1: SUMMARY OF PROPOSED EMISSION LIMITS FOR COMBINED CYCLE COMBUSTION TURBINES (STEADY STATE FULL LOAD OPERATION) 2-6
TABLE 2-2: SUMMARY OF SHORT TERM EMISSION RATES FOR A SINGLE COMBUSTION TURBINE 2-8
TABLE 2-3: EMISSIONS AND DOWNTIMES ASSOCIATED WITH START-UP AND SHUTDOWN EVENTS 2-9
TABLE 2-4: AVERAGE HOURLY EMISSIONS FOR START-UP AND SHUTDOWN EVENTS (INCLUDING DOWNTIME) .2-9
TABLE 2-5: SHORT-TERM POTENTIAL EMISSIONS FROM ANCILLARY EQUIPMENT 2-11
TABLE 2-6: POTENTIAL ANNUAL EMISSIONS FROM ANCILLARY EQUIPMENT 2-11
TABLE 2-7: SUMMARY OF ANNUAL POTENTIAL EMISSIONS 2-12
TABLE 3-1: "Q/D" SCREENING ANALYSIS FOR OCE FOR CLASS I AREAS 3-4
TABLE 3-2: OHIO EPA APPLICABLE REGULATIONS 3-11
TABLE 4-1: SUMMARY OF PROPOSED BACT/BAT EMISSION LIMITS AND ASSOCIATED CONTROL TECHNOLOGIES FOR THE COMBUSTION TURBINES 4-21
TABLE 4-2: SUMMARY OF PROPOSED BACT/BAT EMISSION LIMITS AND ASSOCIATED CONTROL TECHNOLOGIES FOR THE AUXILIARY BOILER 4-22

List of Figures *(provided following text)*

FIGURE 1: SITE LOCATION

Appendices

APPENDIX A: PRINTOUT OF OHIO EPA PERMIT FORMS
APPENDIX B: SUPPORTING CALCULATIONS
APPENDIX C: RBLC TABLES

List of Acronyms and Abbreviations

°F	degrees Fahrenheit
%	percent
AQRV	Air Quality Related Values
BAAMD	Bay Area Air Quality Management District
BACT	Best Available Control Technology
BAT	Best Available Technology
BP	British Petroleum
Btu	British thermal units
Btu/kW-hr	British thermal unit per kilowatt-hour
CAA	Clean Air Act
CAIR	Clean Air Interstate Rule
CARB	California Air Resource Board
CATEF	California Air Toxics Emission Factor
CCGT	combined cycle gas turbine
CCS	carbon capture and sequestration
CEMS	continuous emissions monitoring systems
CFR	Code of Federal Regulations
CH_4	methane
CI	compression ignition
CO	carbon monoxide
CO_2	carbon dioxide
the Court	U.S. Court of Appeals for the D.C. Circuit
CSAPR	Cross-State Air Pollution Rule
CTG	combustion turbine generator
DB	duct burner
DLN	dry low NO_x
FGD	flue gas desulfurization
FLM	Federal Land Manager
GHG	greenhouse gas

g/hp-hr	grams per horsepower-hour
g/kW-hr	grams per kilowatt-hour
HAP	hazardous air pollutant
HHV	higher heating value
H_2O	water
hp	horsepower
HRSG	heat recovery steam generator
H_2SO_4	sulfuric acid mist
ISO	International Organization for Standards
km	kilometer
kV	kilovolts
kW	kilowatts
LAER	Lowest Achievable Emission Rate
lb	pounds
lb/hr	pounds per hour
lb/MMBtu	pounds per million British thermal units
lb/MW-hr	pounds per megawatt-hour
MACT	Maximum Achievable Control Technology
MAGLC	Maximum Acceptable Ground-Level Concentration
mg/l	milligrams per liter
MMBtu	million British thermal units
MMBtu/hr	million British thermal units per hour
MW	megawatts
N_2	nitrogen gas
n/a	not applicable
NESHAP	National Emission Standards for Hazardous Air Pollutants
ng/J	nanograms per Joule
NH_3	ammonia
NO	nitrogen oxide
NO_2	nitrogen dioxide

N_2O	nitrous oxide
NO_x	nitrogen oxides
NSPS	New Source Performance Standards
O_2	oxygen
OAC	Ohio Administrative Code
OCE	Oregon Clean Energy, LLC
Ohio EPA	Ohio Environmental Protection Agency
Pb	lead
PM_{10}	particulate matter with a diameter equal to or less than 10 microns
$PM_{2.5}$	particulate matter with a diameter equal to or less than 2.5 microns
ppm	parts per million
ppm_v	parts per million by volume
ppm_w	parts per million by weight
the Project	Oregon Clean Energy Center
PSD	Prevention of Significant Deterioration
psia	pound per square inch absolute
PTI	Permit to Install
RACT	Reasonably Available Control Technology
RBLC	RACT/BACT/LAER Clearinghouse
scf	standard cubic feet
SCR	selective catalytic reduction
SIL	Significant Impact Level
SIP	State Implementation Plan
SO_2	sulfur dioxide
SO_3	sulfur trioxide
SO_4	sulfate
STG	steam turbine generator
TES	Toledo Environmental Services
TLV	threshold limit value
tpy	tons per year

TSP	total suspended particulates
ULSD	ultra low sulfur diesel
USEPA	United States Environmental Protection Agency
VCAPCD	Ventura County Air Pollution Control District
VOC	volatile organic compounds

1. INTRODUCTION

1.1 Project Overview

Oregon Clean Energy, LLC (OCE) is proposing to construct the Oregon Clean Energy Center, a nominal 800-megawatt (MW) combined cycle gas turbine (CCGT) facility (the Project). The Project will utilize combined cycle combustion turbine technology in a 2 x 2 x 1 configuration. Accordingly, the major equipment will include two combustion turbine generators (CTGs), two supplementary-fired heat recovery steam generators (HRSGs), one steam turbine generator (STG), a mechanical draft wet cooling tower, and associated auxiliary and balance of plant equipment and systems. The Project is anticipated to be fired with natural gas; no oil backup is proposed. Where necessary, ancillary equipment utilizing fuel oil will utilize ultra-low sulfur (0.0015%) diesel (ULSD) fuel. The Project is intended to operate as a base load facility and is proposing to be available to operate up to 8,760 hours per year, incorporating a range of load conditions. The Project seeks the flexibility to operate with frequent starts in order to meet energy demand (anticipating potential operation for 16 hours per day, five days per week).

OCE proposes to construct the Project within an approximately 30-acre parcel of land located entirely within Lucas County in the city of Oregon, Ohio. The site is industrially zoned within the Cedar Point Development Park, a designated Foreign Trade Zone. Its setting is within a mixed industrial, commercial and agricultural area that is located east of Lallendorf Road, west of farmland located at 4632 Cedar Point Road, north of the Norfolk Southern Railroad, and south of the John Gradel and Sons' Farms. Access to the Site is via Lallendorf Road. The western edge of the site is transected by Johlin Ditch, while a tributary of Driftmeyer Ditch transects the eastern portion of the site. Both ditches flow north to Lake Erie, located less than 2 miles north of the site. FirstEnergy-owned transmission lines extend in an east-west direction just to the north of the site.

Air emissions from the proposed Project primarily consist of products of combustion from the combustion turbines, HRSG duct burners, and ancillary equipment. Pollutants that are regulated under federal and Ohio programs, such as Prevention of Significant Deterioration (PSD), include carbon monoxide (CO), nitrogen dioxide (NO_2), sulfur dioxide (SO_2), total suspended particulates (TSP), particulate matter with a diameter equal to or less than 10 microns (PM_{10}), particulate matter with a diameter equal to or less than 2.5 microns ($PM_{2.5}$), volatile organic compounds (VOC), greenhouse gases (GHGs), lead (Pb), sulfuric acid mist (H_2SO_4), and air toxics. Potential emissions from the proposed Project, on a tons per year (tpy) basis, are presented in Table 1-1.

Table 1-1: Summary of Proposed Potential Emissions and Applicable Regulatory Thresholds

Pollutant	Annual Emissions (tpy)	PSD Major Source Threshold (tpy)	PSD Significant Emission Rate (tpy)	PSD Applies? (Yes/No)
NO_x	210.4	100	40 [a]	Yes
VOC	120.7	100	40	Yes
CO	178.2	100	100	Yes
PM_{10}	173.0	100	15	Yes
$PM_{2.5}$	173.0	100	10	Yes
SO_2	40.6	100	40	Yes
H_2SO_4	21.6	100	7	Yes
GHGs[b]	3,287,836	100,000	75,000	Yes
Pb	0.00005	10	0.6	No

a. PSD significant emission rate for NO_2.
b. GHGs are expressed as CO_2.

1.2 Regulatory Overview

The Project will include emissions control technology that will reflect Best Available Control Technology (BACT) and Best Available Technology (BAT), as applicable. In addition to the use of clean-burning natural gas, emissions of nitrogen oxides (NO_x) will be controlled with selective catalytic reduction (SCR). Emissions of CO and VOC will be controlled with oxidation catalyst systems.

1.3 Application Overview

1.3.1 Application Organization

This permit application is divided into five sections. Section 2 provides a detailed description of the proposed Project, including a facility description and estimated emissions. Section 3 provides a review of regulations applicable to the proposed Project. Section 4 provides the BACT/BAT control technology evaluations. Section 5 provides a

list of references. The air quality modeling analysis for the Project will be provided in a separate report.

A printout of the information submitted to the Toledo Environmental Services (TES) via the Ohio Environmental Protection Agency (Ohio EPA) Air Services eBusiness Center is included as Appendix A. Emission calculation spreadsheets providing supporting calculations for the application are provided in Appendix B. Appendix C presents summary tables supporting the BACT/BAT analysis.

1.3.2 Application Contacts

To facilitate agency review of this application, individuals familiar with the Project and this application are identified below.

William J. Martin
Oregon Clean Energy, LLC
20 Park Plaza, Suite #471
Boston, MA 02116
Phone: 617-945-2165
Email: wmartin@cme-energy.com

Lynn Gresock
ARCADIS
One Executive Drive, Suite 303
Chelmsford, MA 01824
Phone: 978-322-4520
e-mail: lynn.gresock@arcadis-us.com

2. PROJECT DESCRIPTION

2.1 Overview

OCE proposes development of a nominal 800-MW electric generating facility at an industrially zoned site in the city of Oregon, Ohio. Figure 1 presents the proposed Project location on a topographic map. The facility will include the following major and ancillary equipment:

- Two CTGs;
- Two HRSGs with supplemental duct firing;
- One STG;
- One mechanical draft wet cooling tower;
- One 1,500-kilowatt (kW) emergency diesel generator;
- One natural gas-fired, 90-million British thermal units (MMBtu) steam production auxiliary boiler; and
- One 250-horsepower (hp) fire pump.

The Project will be fueled by clean-burning natural gas to be provided by a new natural gas pipeline lateral connection from the nearby natural gas networks of NiSource/Columbia Gas or ANR Pipeline/TransCanada. Electrical interconnection will be to the 345-kilovolt (kV) FirstEnergy transmission line, located just north of the site.

Steam condenser cooling will utilize a 12-cell mechanical draft wet cooling tower system with average consumptive water use of 6 - 7 million gallons per day. A combination of treated effluent and/or raw water from the city of Oregon is being considered for process use. Discharge of wastewater is anticipated to be to the Oregon sanitary sewer system for treatment at the wastewater treatment plant, located within 1 mile of the site.

2.2 Site Location

The proposed site consists of an irregularly shaped parcel of land, totaling approximately 30 acres, located entirely within Lucas County in the city of Oregon, Ohio. The site is industrially zoned within the Cedar Point Development Park, a designated Foreign Trade Zone. Its setting is within a mixed industrial, commercial and agricultural area that is located east of Lallendorf Road, west of farmland located at 4632 Cedar Point Road, north of the Norfolk Southern Railroad, and south of the John Gradel and Sons' Farms.

Access to the site is via Lallendorf Road. The western edge of the site is transected by Johlin Ditch, while a tributary of Driftmeyer Ditch transects the eastern portion of the site. Both ditches flow north to Lake Erie, located less than 2 miles north of the site. FirstEnergy-owned transmission lines extend in an east-west direction just to the north of the site.

The site consists of farmland with associated structures, including two single-family dwellings, a garage and a barn. The majority of the parcel is in active agricultural use. Site topography is relatively flat, at an elevation of approximately 590 feet above mean sea level. The Maumee River, which flows southwest to northeast to its confluence with Lake Erie, is situated approximately 2 miles northwest of the site.

The Project is located approximately 2 miles south of First Energy's existing Bay Shore coal-fired power plant on Lake Erie. British Petroleum's (BP's) expansive Toledo Refinery is located less than 0.5 mile to the north, beyond the electric transmission corridor. Land uses east and southeast of the site are primarily agricultural, with some residences along the roads which divide the land in a grid-like fashion. A cluster of commercial/industrial uses border the site to the south-southwest, including several manufacturing and warehouse facilities, among them, Fresenius Medical Care (a manufacturer of dialysis machines) and Caraustar (a manufacturer of gypsum facing paper and spiral-wound paper tubes). More densely developed residential areas are located about a mile southwest of the site.

Pearson Park is located approximately 1.5 miles south of the site, Collins Park is 1.5 miles west-southwest of the site, and Maumee Bay State Park is approximately 2 miles east-northeast of the site. Further east-northeast, along the shore of Lake Erie, are Mallard Club Wilderness Area and Cedar Point National Wildlife Refuge.

2.3 Combined Cycle Combustion Turbines

The Project's major equipment will include two CTGs, two supplementary-fired HRSGs, one STG, and a 12-cell mechanical draft wet cooling tower. This equipment is described in more detail below. The information provided in this application are based upon a Siemens "F" class CTG, or equivalent.

2.3.1 Combustion Turbine Generators

Thermal energy will be produced in the two CTGs through the combustion of natural gas as the sole fuel. Each CTG is capable of running independently of the other. The thermal

energy is converted to mechanical energy in the CTG turbine that drives the CTG compressor and electric generator. The maximum heat input rate of each CTG for 100 percent load at International Organization for Standards (ISO) temperature (59 degrees Fahrenheit [°F]), relative humidity of 71 percent and a site pressure of 14.5 pounds per square inch absolute (psia) is 2,266 MMBtu per hour (MMBtu/hr) at the higher heating value (HHV) for natural gas.

2.3.2 Heat Recovery Steam Generators and Duct Burners

In the combined cycle configuration, each CTG will exhaust through a dedicated HRSG to generate steam from the waste heat energy in the exhaust gas. Each HRSG will be equipped with supplemental fuel firing via a duct burner. The duct burners provide additional energy to the HRSG, to provide more steam to the STG during periods of high demand. The duct burners will be natural gas fired and each will have a maximum input capacity of 841 MMBtu/hr (HHV), although the duct burners will not always operate at maximum capacity. The use of the duct burner will vary based upon different temperature and operating conditions.

2.3.3 Steam Turbine Generator

Steam generated in the HRSGs will be expanded through a STG multi-stage, reheat, condensing turbine and associated electric generator to generate additional electricity.

2.3.4 Cooling Tower

The steam condenser cooling will utilize a 12-cell mechanical draft wet cooling tower system. In the cooling tower, circulating water is distributed among multiple cells of the cooling tower, where it cascades downward through each cell and then collects in the cooling tower basin. The mechanical draft cooling tower employs electric motor-driven fans to move air through each cooling tower cell. The cascading circulating water is partially evaporated and the evaporated water is dispersed to the atmosphere as part of the moist air leaving each cooling tower cell. The circulating water is cooled primarily through its partial evaporation. The cooling tower will be equipped with a high-efficiency drift eliminator with an efficiency of 0.0005 percent.

2.4 Air Pollution Control Equipment

The emission control technologies proposed for the combustion turbine and duct burner exhaust gases include dry low-NO_x (DLN) combustors which are integrated within the

combustion turbines, and SCR systems and oxidation catalysts which are located within each HRSG to control NO_x, CO and VOC emissions. The DLN combustion controls NO_x formation by pre-mixing fuel and air immediately prior to combustion. Pre-mixing inhibits NO_x formation by minimizing both the flame temperature and the concentration of oxygen at the flame front. The SCR systems further control NO_x emissions, while the oxidation catalysts control emissions of CO and VOC. Emissions of SO_2, $PM_{10}/PM_{2.5}$, and H_2SO_4 will be minimized through the exclusive use of pipeline quality natural gas in the combustion turbines. The SCR and oxidation catalyst are discussed further in the sections below.

2.4.1 Selective Catalytic Reduction

SCR, a post-combustion chemical process, will be installed in the HRSGs to treat exhaust gases downstream of the CTGs. The SCR process will use 19 percent aqueous ammonia (NH_3) as a reagent. Aqueous NH_3 will be injected into the flue gas stream, upstream of the SCR catalyst, where it will mix with NO_x. The catalyst bed will be located in a temperature zone of the HRSG where the catalyst is most effective. The mixture will pass over the catalyst and the NO_x will be reduced to nitrogen gas (N_2) and water (H_2O). The SCR system will reduce NO_x concentrations to 2.0 parts per million by volume (ppm_v) at 15 percent oxygen (O_2) with or without duct firing at all load conditions and ambient temperatures. A small amount of NH_3 will remain un-reacted through the catalyst, which is called the “ammonia slip.” The NH_3 slip will be limited to 5.0 ppm_v at all load conditions and ambient temperatures.

2.4.2 Oxidation Catalyst

An oxidation catalyst system will be located within each HRSG to control emissions of CO and VOC. Exhaust gases from the turbines will be passed over a catalyst bed where excess air will oxidize the CO and VOC to form carbon dioxide (CO_2) and H_2O. The oxidation catalyst system will reduce CO concentrations to 2.0 ppm_v (at 15% O_2) in the exhaust gas under all load conditions and ambient temperatures. The oxidation catalyst will also reduce VOC emissions, to between 1.0 ppm to 3.5 ppm, depending on the amount of supplemental duct firing.

2.5 Ancillary Equipment

The proposed Project will utilize a variety of ancillary equipment to support the facility including an auxiliary boiler, an emergency generator, an emergency fire pump, and storage tanks. This equipment is discussed further in the sections below.

2.5.1 Auxiliary Boiler

An auxiliary boiler will operate as needed to keep the HRSG warm during periods of turbine shutdown and provide sealing steam to the steam turbine during warm and hot starts. The auxiliary boiler will have a maximum input capacity of 90 MMBtu/hr.

2.5.2 Emergency Diesel Generator

The Project will have a 1,500-kW emergency diesel generator to provide on-site emergency power capabilities independent of the utility grid. The emergency generator will fire ULSD fuel and will typically only operate for testing and to maintain operational readiness in the event of an emergency. Routine operation of the generator will be limited to a maximum of 500 operating hours per year.

2.5.3 Emergency Diesel Fire Pump

The Project will have an emergency fire pump to provide on-site fire fighting capabilities independent of the utility grid. The emergency fire pump will fire ULSD fuel and will typically only operate for testing and to maintain operational readiness in the event of an emergency. Similar to the emergency generator, it will be limited to a maximum of 500 operating hours per year.

2.5.4 Aqueous NH_3 Storage Tank

The proposed facility will have tanks that will store 19 percent aqueous NH_3 for use in the SCR system. The tanks will be equipped with secondary containment sized to accommodate the entire volume of one tank and sufficient freeboard for precipitation. The tanks will be located outdoors within an impermeable containment area, surrounded by a wall. The floor of the containment area will be covered with plastic balls designed to float on the liquid surface in the event of a spill, thereby reducing the exposed surface area, and minimizing potential emissions.

2.6 Emissions Estimates

The combined cycle units will typically operate at or near full load capacity to respond to electricity demands as needed. However, depending upon the demand, each unit can operate at loads ranging from approximately 50 percent turbine load without supplemental duct firing to 100 percent load with supplemental duct firing (full capacity). The emissions provided in this application are based upon 100 percent load steady state

operation of a Siemens "F" Class turbine, or equivalent. Combustion turbine performance and emissions are affected by ambient conditions: humidity, pressure and temperature; with turbine fuel consumption, power output and emissions increasing at lower ambient temperatures. Supplemental duct firing performance and emissions are affected indirectly by ambient conditions, with fuel consumption, heat output and emissions increasing at higher ambient temperatures. As the combustion turbine decreases heat output to the HRSG at higher ambient temperatures, the supplemental duct firing increases to make up the loss of heat output to maintain maximum steam production to the steam turbine.

Table 2-1 presents a summary of the proposed limits for pollutants emitted from combined cycle combustion turbines at steady state full load operation. The limits incorporate BACT/BAT as applicable (Section 4.0).

Table 2-1: Summary of Proposed Emission Limits for Combined Cycle Combustion Turbines (Steady State Full Load Operation)[a]

Pollutant	Case	Emission Rate (lb/MMBtu)[b]	Emission Rate (ppm_v)[c]
NO_x	CT Only	0.0076	2.0
	CT with DB[d]	0.0077	2.0
VOC	CT Only	0.0013	1.0
	CT with DB	0.0048	3.5
CO	CT Only	0.0048	2.0
	CT with DB	0.0048	2.0
$PM_{10}/PM_{2.5}$	CT Only	0.0049	n/a
	CT with DB	0.0065	n/a
SO_2	CT Only	0.0015	n/a
	CT with DB	0.0015	n/a
H_2SO4	CT Only	0.0008	n/a
	CT with DB	0.0008	n/a

a. Facility may exceed these limits during defined periods of startup and shutdown.
b. Emission rates are based on HHV of natural gas.
c. Concentrations are ppm_v at 15% O_2.
d. Duct burner.

Because of the different emission rates and exhaust characteristics, a matrix of operation modes, including partial load operation, will be evaluated in the OCE Dispersion Modeling Report.

Combined cycle start-up and shutdown scenarios are also addressed in this air permit application. Emissions during start-up and shutdown may, for some pollutants, result in an increase in short term (pounds per hour [lb/hr]) emission rates. There is a minimum turbine downtime and maximum duration associated with each type of start-up. There is also a maximum duration associated with each shutdown. Potential annual emissions estimates for the proposed Project include emissions from start-up and shutdown.

The following sections provide estimated emissions from the combined cycle combustion turbines and from the facility's ancillary equipment. Emissions of air contaminants from this equipment have been estimated based upon vendor emission guarantees, United States Environmental Protection Agency (USEPA) emission factors, mass balance calculations and engineering estimates.

2.6.1 Combined Cycle Combustion Turbine Emissions – Steady State Operation

Table 2-2 presents short term (lb/hr) emissions estimates from each combined cycle turbine under ISO conditions at 100 percent load conditions including duct burner operations. These emissions were developed from vendor estimates. The $PM_{10}/PM_{2.5}$ emissions estimates include filterable and condensable particulate matter and an allowance for sulfate and/or ammonia salt formation due to the reaction of sulfur trioxide (SO_3) with H_2O and/or excess NH_3 in the SCR and oxidation catalyst systems. Emission rates for all base load operating conditions are provided in Appendix B.

Potential non-criteria pollutant emissions from the operation of the combustion turbines and ancillary equipment were estimated using AP-42 emission factors (USEPA, 2000) with the following exceptions. Emissions of formaldehyde from the combustion turbine generators were estimated using an emission factor from a California Air Resource Board (CARB) database. The California Air Toxics Emission Factor (CATEF) database contains air toxics emission factors calculated from source test data collected for California's Air Toxics Hot Spots Program (CARB, 1996). Emissions of hexane from the duct burner and the auxiliary boiler were estimated using an emission factor from the Ventura County Air Pollution Control District (VCAPCD, 2001). In both cases, the AP-42 emission factors had a very low emission factor rating and were not considered representative of the proposed equipment. The CARB and VCAPCD emission factors are considered more appropriate for the advanced technology of the combustion turbines. Potential emissions of Hazardous Air Pollutants (HAPs) and Ohio EPA air toxics from operation of the combustion turbines and duct burners are also provided in Appendix B.

Table 2-2: Summary of Short Term Emission Rates for a Single Combustion Turbine[a]

Pollutant	100% Load with Duct Burning (lb/hr)	100% Load without Duct Burning (lb/hr)
NO_x	23.0	17.0
VOC	13.0	3.0
CO	14.0	10.0
$PM_{10}/PM_{2.5}$	19.0	11.0
SO_2	4.6	3.4
H_2SO_4	2.5	1.8
NH_3	21.0	16.0

a. Emissions presented in table are for ISO conditions. These may not represent worst-case conditions for air quality dispersion modeling. Appropriate worst-case conditions will be used for these analyses in the Dispersion Modeling Report.

2.6.2 Combined Cycle Combustion Turbine Emissions – Start-up and Shutdown Operations

Potential emissions associated with start-up and shutdown of the combustion turbines were developed using vendor supplied information. Table 2-3 presents the emissions and downtimes (minimum number of hours the turbines would be off before a re-start) associated with startup and shutdown events for the combined cycle turbines. In most cases, emissions from these events are “self correcting” on an annual basis. In other words, the average hourly emissions for each startup event (including downtime) are less than the corresponding steady state emission rate for the minimum downtime that would precede a start. Table 2-3 identifies the pollutants that are self-correcting for each event. Permitted annual emission limits for the facility incorporates those conditions that are not considered self-correcting. Table 2-4 presents the average hourly emission rates associated with each start-up/shutdown event. These emission rates incorporate the minimum downtime that would precede each event. These average hourly rates were used to determine if the event was considered self-correcting compared to steady state emission rates. Emissions of SO_2 will always be self-correcting because SO_2 emissions are dependent upon the amount of fuel burned, and steady state is always worst-case.

Table 2-3: Emissions and Downtimes Associated with Start-up and Shutdown Events

	Cold Startup	Hot Startup	Warm Start-up	Shutdown
Number of Events per Year	50	250[a]	0	300
Minimum Downtime Preceding Event (hrs)[b]	64	2	16	1
Duration of Event (min)[c]	178	80	88	42
	Emissions Per Event (lb)[d]			
$PM_{10}/PM_{2.5}$	24	12	14	6
NO_x	76	64	67	32
CO	253	130	130	80
VOC	63	51	52	31
	Self-Correcting			
$PM_{10}/PM_{2.5}$	Yes	Yes	Yes	Yes
NO_x	Yes	Yes	Yes	Yes
CO	Yes	No	Yes	No
VOC	Yes	No	Yes	No

a. Total hot start and warm start emissions are 250 starts.
b. hours
c. minutes
d. pounds

Table 2-4: Average Hourly Emissions for Start-up and Shutdown Events (including downtime)

Pollutant	Cold Startup (lb/hr)	Hot Startup (lb/hr)	Warm Start-up (lb/hr)	Shutdown (lb/hr)
$PM_{10}/PM_{2.5}$	0.36	3.60	0.80	3.65
NO_x	1.13	19.20	3.84	18.82
CO	3.78	39.00	7.44	47.06
VOC	0.94	15.30	2.98	18.24

2.6.3 Ancillary Equipment

This section presents estimated criteria pollutant emissions from the ancillary equipment at the facility. The proposed ancillary equipment includes one auxiliary boiler, one emergency generator, one emergency fire pump, and the cooling tower. The following assumptions were used in evaluating emissions from this equipment:

- The natural gas-fired auxiliary boiler will have a maximum input capacity of 90.0 MMBtu/hr with unlimited hours of operation per year.
- The diesel-fired emergency fire pump will have a maximum heat input of 1.3 MMBtu/hr (9.3 gallons per hour) and will be limited to 500 hours of operation per year.
- The diesel-fired emergency generator will have a maximum heat input of 14.1 MMBtu/hr (101 gallons per hour) and will be limited to 500 hours of operation per year.
- The cooling tower is expected to have a recirculating flow rate of 133,700 gallons per minute and 3,000 milligrams per liter (mg/l) of TDS.

Criteria pollutant emissions from the ancillary equipment were estimated based on vendor supplied information except for SO_2 emissions from the emergency equipment, which are based on a mass balance assuming ULSD. $PM_{10}/PM_{2.5}$ emissions from the cooling tower are based upon design values and conservatively assume five cycles of concentration. The cooling tower will utilize a high efficiency drift eliminator.

Tables 2-5 and 2-6 summarize estimated short-term (lb/hr) and annual emissions of criteria pollutants from the ancillary equipment. Supporting calculations are located in Appendix B.

Table 2-5: Short-Term Potential Emissions from Ancillary Equipment

Pollutant	Auxiliary Boiler (lb/hr)	Emergency Fire Pump (lb/hr)	Emergency Generator (lb/hr)	Cooling Tower (lb/hr)
PM_{10}	0.45	0.08	0.66	1.00
$PM_{2.5}$	0.45	0.08	0.66	1.00
SO_2	0.06	0.003	0.021	--
NO_x	0.90	1.44	18.53	--
CO	3.33	1.44	11.56	--
VOC	0.36	0.20	2.62	--
Pb	0.00	0.00002	0.0002	--

Table 2-6: Potential Annual Emissions from Ancillary Equipment

Pollutant	Auxiliary Boiler (tpy)	Emergency Fire Pump (tpy)	Emergency Generator (tpy)	Cooling Tower (tpy)	Total (tpy)
PM_{10}	1.97	0.021	0.17	4.4	6.56
$PM_{2.5}$	1.97	0.021	0.17	4.4	6.56
SO_2	0.28	0.0007	0.005	--	0.29
NO_x	3.94	0.36	4.63	--	8.93
CO	14.59	0.36	2.89	--	17.84
VOC	1.58	0.05	0.65	--	2.28
Pb	0.00	0.000006	0.00005	--	0.00006

HAP emissions will be less than major source thresholds, less than 10 tpy for any individual HAP and 25 tpy for total HAPs.

2.6.4 Potential Annual Emissions

Potential annual emissions from the proposed facility were estimated using the following worst-case assumptions:

- Full load operation of the combustion turbines (at 59°F ambient temperature);
- Duct burning for 8,760 hours per year during steady state operation of each combustion turbine;
- Incorporation of start-up/shutdown events as described in Section 2.6.2; for start-up/shutdown events that are not self correcting, a total of 300 combined start-up events per year and 300 shutdown events per year were assumed (see Table 2-3); and
- Incorporation of emissions from ancillary equipment as discussed in Section 2.6.3 (see Table 2-6).

Potential annual emissions for the proposed Project are summarized in Table 2-7.

Table 2-7: Summary of Annual Potential Emissions

Pollutant	Combustion Turbines (tpy)	Ancillary Equipment (tpy)	Total (tpy)
PM_{10}	166.4	6.6	173.0
$PM_{2.5}$	166.4	6.6	173.0
SO_2	40.3	0.3	40.6
NO_x	201.5	8.9	210.4
CO	160.3	17.8	178.2
VOC	118.5	2.3	120.7
H_2SO_4	21.6	0.02	21.6
NH_3	184.0	0.0	184.0
Pb	0.0	0.00006	0.00006

.

3. REGULATORY APPLICABILITY EVALUATION

OCE is requesting approval to construct a nominal 800-MW combined cycle electric generating facility in the city of Oregon, Lucas County, Ohio. The Project is considered a new major stationary combustion source under PSD regulations because the potential annual emissions from the facility exceed major source thresholds as illustrated in Table 1-1.

This section contains an analysis of the applicability of federal and state air quality regulations to the proposed Project. The specific regulations and programs that are included in this review include:

- PSD New Source Review;
- Federal New Source Performance Standards (NSPS);
- Federal National Emission Standards for Hazardous Air Pollutants (NESHAP);
- Federal Acid Rain Program;
- Other Ohio EPA requirements; and
- Accidental Release requirements.

3.1 PSD New Source Review

Combined cycle power plants with potential emissions greater than 100 tpy of one or more criteria pollutants are considered new major stationary sources under the PSD program. As shown in Table 1-1, the potential emissions of at least one regulated criteria pollutant will exceed this threshold. As such, the proposed facility is subject to PSD New Source Review. Under the PSD regulations, once a major source threshold is triggered, PSD review must be completed for all pollutants whose potential emissions exceed their Significant Emission Rate increase.

On April 2, 2007, the U.S. Supreme Court found that GHGs, including CO_2, are air pollutants covered by the Clean Air Act (CAA). On May 13, 2010, the USEPA issued a final rule (called the “Tailoring Rule”) that establishes an approach to GHG emissions from stationary sources under the CAA. This final rule “tailors” the requirements of the CAA permitting program to limit which facilities will be required to obtain PSD permits. The CAA permitting program emissions thresholds for criteria pollutants are 100 tpy or 250 tpy, depending on the source category. While these thresholds are appropriate for criteria

pollutants, they are not feasible for GHG emissions as they are emitted in much greater quantities. USEPA will phase in the CAA permitting requirements in two phases:

- Only sources already subject to the PSD program (i.e., new major sources such as the OCE Project) are subject to permitting requirements for their GHG emissions under PSD. For these projects, those with GHG emission increases of 75,000 tpy or greater are required to determine BACT for their GHG emissions. This phase began on January 2, 2011.
- In the second phase, PSD permitting requirements will cover new construction projects that exceed 100,000 tpy of GHG emissions, even if they do not exceed any other permitting thresholds. This began on July 1, 2011.

As presented in Table 1-1, the Project has triggered major source thresholds for GHGs. In addition, PSD review is required for NO_x, CO, VOC, SO_2, H_2SO_4 and $PM_{10}/PM_{2.5}$ emissions.

PSD review requirements include application of BACT, an ambient air quality modeling analysis demonstrating compliance with NAAQS and PSD increments, and an additional impacts analysis. Ohio EPA has been delegated PSD review authority by USEPA. For an air contaminant subject to BACT, compliance with BACT requirements also represents Ohio EPA BAT.

3.1.1 Best Available Control Technology

Pollutants subject to PSD review are required to apply BACT for control of emissions of PSD pollutants. BACT is defined as an emission limitation based on the maximum degree of reduction, on a case-by-case basis, taking into account energy, environmental and economic considerations. In establishing the final BACT limit, USEPA may consider any new information, including recent permit decisions, subsequent to submittal of a complete application. The BACT analyses for NO_x, CO, VOC, SO_2, H_2SO_4 and $PM_{10}/PM_{2.5}$ are presented in Section 4.0.

3.1.2 Air Quality Impact Analysis

An ambient air quality analysis must be performed to demonstrate compliance with NAAQS and PSD increments. Proposed new sources subject to PSD review may not cause or significantly contribute to a violation of the NAAQS. As part of this demonstration, the USEPA has established Significant Impact Levels (SILs) for all of the criteria pollutants. SILs represent concentrations of pollutants that are considered to be

insignificant with respect to demonstration of NAAQS compliance. By definition, proposed new sources whose air quality impacts are less than SILs neither cause nor significantly contribute to NAAQS violations. Proposed new sources whose air quality impacts exceed the SILs must complete a cumulative analysis taking into consideration existing background air quality levels and contributions from other sources.

The air quality impact analysis for the Project will be included in the OCE Dispersion Modeling Report.

3.1.3 PSD Class I Area Impact Analysis

PSD regulations require that proposed major sources within 100 kilometers (km) of a PSD Class I area perform an assessment of potential impacts in the PSD Class I area. PSD Class I areas are specifically designated areas of special national or regional value from a natural, scenic, recreational or historic perspective. These areas are administered by the National Park Service, U.S. Fish and Wildlife Service, or the U.S. Forest Service. These Federal Land Managers (FLMs) are responsible for evaluating proposed projects' air quality impacts in the Class I areas and may make recommendations to the permitting agency to approve or deny permit applications.

PSD Class I area impact analyses consist of:

- An air quality impact analysis;
- A visibility impairment analysis; and
- An analysis of impacts on other air quality related values (AQRVs) such as impacts to flora and fauna, water, and cultural resources.

There are no PSD Class I areas within 100 km of the proposed Project site. The nearest PSD Class I Areas are the Otter Creek and Dolly Sods Wilderness Areas in West Virginia, and the Mammoth Cave National Park in Kentucky. These PSD Class I areas are located over 250 miles from the Project.

Ohio EPA recommends that a screening formula be used to determine if a Class I Area is close enough to warrant analysis. The screening formula, which is found in *The Federal Land Managers AQRV Workgroup (FLAG) Phase I Report – Revised* (FLAG 2010) is provided below:

A PSD Class I area analysis is not required if Q (tpy)/d (km) $\leq$ 10,

where:

Q = the combined emissions increase from a source of SO_2, NO_x, PM_{10}, and H_2SO_4 in tpy based on 24-hour maximum allowable emissions (which are annualized); and

d = the nearest distance (km) to a Class I area from the source.

Table 3-1: "Q/d" Screening Analysis for OCE for Class I Areas

Class I Area	d, Distance to Class I Area (km)	SO_2 Emissions (tpy)	NO_x Emissions (tpy)	PM_{10} Emissions (tpy)	H_2SO_4 Emissions (tpy)	Q, Total Emissions (tpy)	Q/d (tpy/km)
Otter Creek	439.0	40.6	210.4	173.0	21.6	445.6	1.0
Dolly Sods	457.0	40.6	210.4	173.0	21.6	445.6	1.0
Mammoth Cave	548.0	40.6	210.4	173.0	21.6	445.6	0.8

Table 3-1 presents results of the screening calculation performed in accordance with the screening formula. The calculations show that "Q/d" is below 10 for the nearest Class I areas to the proposed source. Accordingly, based on the level of proposed emissions from the Project, the distances to the nearest PSD Class I areas, and the screening calculation above, a PSD Class I impact analysis is not required for the Project.

3.1.4 Additional Impact Analyses

Additional impact analyses are also required as part of PSD review and Ohio EPA regulations. These additional analyses include an assessment of impacts on community growth resulting from the Project, an assessment of visibility impairment and an assessment of impacts to soils and vegetation. These impact analyses will be presented in the OCE Dispersion Modeling Report.

Federal actions, such as the issuance of PSD permits (in this case, delegated to the state), require review and consideration of the potential implications of a proposed project to endangered or threatened species and their habitats, as well as cultural resources. OCE will consult with applicable agencies to determine whether such resources will require

specific consideration, and records of these communications will be provided in the OCE Dispersion Modeling Report.

3.2 New Source Performance Standards

NSPS are technology-based standards applicable to new and modified stationary sources. NSPS have been established for approximately 70 source categories. Based upon a review of these standards, several subparts are applicable to the proposed Project. The Project's compliance with each of these standards is presented in the sections below.

3.2.1 40 CFR 60 – Subpart A – General Provisions

Any source subject to an applicable standard under 40 Code of Federal Regulations (CFR) 60 is also subject to the general provisions under Subpart A. Because the Project is subject to other Subparts of the regulation, the requirements of Subpart A will also apply. OCE will comply with the applicable notifications, performance testing, recordkeeping and reporting outlined in Subpart A.

3.2.2 40 CFR 60 – Subpart KKKK – Stationary Combustion Turbines

Subpart KKKK places emission limits on NO_x and SO_2 from new combustion turbines. The proposed combustion turbines and duct burners would be subject to this standard. For new combustion turbines firing natural gas with a rated heat input greater than 850 MMBtu/hr, NO_x emissions are limited to:

- 15 ppm_v at 15 percent O_2; or
- 54 nanograms per Joule (ng/J) of useful output (0.43 pounds per megawatt-hour [lb/MW-hr]).

Additionally, SO_2 emissions must meet one of the following:

- Emissions limited to 110 ng/J (0.90 lb/MW-hr) gross output; or
- Emissions limited to 26 ng/J (0.060 lb/MMBtu).

As described in Section 2.0, the proposed Project will use an SCR system to reduce NO_x emissions to 2 ppm_v at 15 percent O_2 and pipeline natural gas to limit SO_2 emissions to 0.0015 lb/MMBtu. As such, the Project will meet the emission limits under Subpart KKKK.

Additionally, the provisions of this Subpart require continuous monitoring of water-to-fuel ratio, but allow for the use of either a 40 CFR Part 60 or Part 75 certified NO_x continuous emissions monitoring system (CEMS) in lieu of this requirement. OCE is proposing to use a 40 CFR Part 75 certified NO_x CEMS, which will satisfy this requirement.

3.2.3 40 CFR 60 – Subpart Dc – Small Industrial-Commercial-Institutional Steam Generating Units

Subpart Dc is applicable to steam generating units with a maximum input capacity greater than 10 MMBtu/hr and less than 100 MMBtu/hr. The proposed auxiliary boiler has a maximum input capacity of 90 MMBtu/hr, and is, therefore, subject to the standard. For units combusting natural gas, the standard requires initial notifications at the start of construction and at startup. In addition, records must be maintained regarding the amount of fuel burned on a monthly basis; however, since natural gas is the only fuel burned in the proposed boiler, there are no specific reporting requirements to the USEPA under Subpart Dc.

3.2.4 40 CFR 60 – Subpart IIII – Stationary Compression Ignition Internal Combustion Engines

Subpart IIII is applicable to owners and operators of stationary compression ignition (CI) internal combustion engines that commence operation after July 11, 2005. Relevant to the proposed project, this rule applies to the emergency generator and emergency fire pump.

For model year 2009 and later fire pump engines with a displacement less than 30 liters per cylinder and an energy rating between 300 and 600 hp, Subpart IIII provides the following emission limits:

- 4.0 grams per kilowatt-hour (g/kW-hr) (3.0 grams per horsepower-hour [g/hp-hr]) of VOC + NO_x
- 3.5 g/kW-hr (2.6 g/hp-hr) of CO
- 0.2 g/kW-hr (0.15 g/hp-hr) of particulate matter

The Project will install a fire pump meeting these emission standards.

To comply with Subpart IIII, the emergency generator must meet the emission standards for new non-road CI engines (Tier 2 or 3). Engines with a model year 2006 or later with a power rating of 560 kW (750 hp) or greater must meet the following limits:

- 6.4 g/kW-hr (4.8 g/hp-hr) of VOC + NO_x
- 3.5 g/kW-hr (2.6 g/hp-hr) of CO
- 0.2 g/kW-hr (0.15 g/hp-hr) of particulate matter

The emergency generator associated with the proposed Project will be certified to meet non-road emission standards.

3.3 State of Ohio Best Available Technology

"Best available technology," or BAT, means any combination of work practices, raw material specifications, throughput limitations, source design characteristics, an evaluation of the annualized cost per ton of air pollutant removed, and air pollution control devices that have been previously demonstrated to the director of environmental protection to operate satisfactorily in this state or other states with similar air quality on substantially similar air pollution sources (Ohio Administrative Code [OAC] Rule 3745-31-01 (T)).

Ohio EPA has published several memoranda (inter-office communications) and engineering guides that explain the implementation of the BAT program. Under the BAT program, sources with pollutants meeting certain other standards also meet BAT. For pollutants subject to BACT requirements, BACT is presumed to meet BAT requirements. For pollutants subject to NSPS, compliance with NSPS represents BAT. If there is a Reasonably Available Control Technology (RACT) minimum limit anywhere in the state, BAT is determined to be at a minimum, equivalent to most stringent pollutant emission rate limit no matter where in the state the RACT limit applies. Where the above prescriptive approach is not applicable to a criteria pollutant, a case-by-case BAT determination may be conducted using a "top down" approach, similar to a BACT analysis. BAT for criteria pollutants is described in Section 4.0.

For HAPs subject to Maximum Available Control Technology (MACT), compliance with MACT represents BAT. In addition, BAT is applied to any air toxic (non-criteria pollutant) for which there is no federal or state standard using Ohio EPA's Air Toxics policy. Ohio EPA's Air Toxic policy is contained in the guidance document titled "Option A – Review of New Sources of Air Toxics." The guidelines are:

- Determine if a threshold limit value (TLV) exists for the specific compound, which is emitted from the source.

- Divide the TLV by ten to adjust the standard from the working population to the general public (TLV/10).

- Adjust the standard to account for the duration of the exposure (operating hours of source) of "X" hours per day and "Y" days per week from 8 hours per day and 5 days per week. This formula is used to obtain the Maximum Acceptable Ground-Level Concentration (MAGLC) or Acceptable Incremental Impact:

$$\frac{TLV}{10} \times \frac{8}{X} \times \frac{5}{Y} = 4\frac{TLV}{XY} = MAGLC$$

- Compare the one-hour averaging time ambient pollutant emissions, predicted by an appropriate air dispersion model, with the corresponding MAGLC for compliance with the air toxic's policy.

A comprehensive list of air toxics to which the policy applies is contained in Appendix B of OAC Rule 3745-114. For these air toxics, Ohio EPA requires only those emitted above one ton per year to be subject to review. For the Project, the following air toxics will be subject to "Option A" review or require a BAT determination: ammonia; formaldehyde; toluene; xylene; and sulfuric acid.

3.4 Operating Permit

OAC Rule 3745-77 specifies that a facility with an annual potential to emit equal to or exceeding any of the following thresholds is required to obtain an Operating Permit from Ohio EPA:

- CO – 100 tpy;
- PM_{10} – 100 tpy;
- TSP – 100 tpy;
- SO_2 – 100 tpy;
- NO_x – 100 tpy;
- VOC – 100 tpy;
- Pb – 10 tpy;
- Any other contaminant, except CO_2 – 100 tpy;
- Any single HAP – 10 tpy; and

- Combination of HAPs – 25 tpy.

Potential NO_x, CO, VOC, and PM_{10} emissions for the Project exceed the Title V Operating Permit applicability threshold, triggering the need to apply for the Operating Permit. The Project is also required to obtain an Operating Permit due to the combustion turbines being subject to New Source Performance Standards Subpart KKKK.

An Operating Permit application is a comprehensive document that includes: potential to emit data for all sources across the facility; supporting information and calculations; control equipment data; a review of state and federal regulations; a description of proposed monitoring methods; fuel data; stack and vent information; a proposed compliance plan; proposed operating hours; and descriptions of normal source operation and startup and shutdown conditions for each source at the facility along with emissions data for those operating modes. Permit applications are submitted using the Ohio EPA Air Services system.

Pursuant to OAC rule 3745-77-04, a timely and complete Title V operating permit is required to be submitted within 12 months after commencing operations. As per OAC rule 3745-77-08, the state shall take final action on the application within 18 months of receiving a complete application. The draft permit shall be issued no later than 45 days before the aforementioned deadline for final action on the permit.

3.5 National Emission Standards for Hazardous Air Pollutants (40 CFR Parts 61 and 63)

There are no 40 CFR Part 61 standards applicable to the proposed facility operations. Current USEPA AP-42 emission factors, other emission factors and vendor information were reviewed in determining if the proposed project was subject to a standard under 40 CFR Part 63. Based on potential emission calculations, the potential emissions of a single HAP will not exceed the major source threshold of 10 tpy. In addition, potential emissions of combined HAPs will be less than the major source threshold of 25 tpy. Therefore, the major source NESHAP standards under 40 CFR Part 63 are not applicable to this Project.

The USEPA has also promulgated a variety of standards applicable to area sources, those sources that are not considered major sources of HAPs. USEPA recently promulgated an area source standard for industrial, commercial and institutional boilers. This standard does not have requirements for boilers that are natural gas fired. As such, the boiler associated with the proposed Project does not have any requirements under this standard.

3.6 Acid Rain Program

Title IV of the Clean Air Act Amendments required USEPA to establish a program to reduce emissions of acid rain forming pollutants, called the Acid Rain Program. The overall goal of this program is to achieve significant environmental benefits through reduction in SO_2 and NO_x emissions. To achieve this goal, the program employs both traditional and market-based approaches for controlling air pollution. Under the market-based aspect of the program, affected units are allocated SO_2 allowances by the USEPA, which may be used to offset emissions, or traded under the market allowance program. In addition, in order to ensure that facilities do not exceed their allowances, affected units are required to monitor and report their emissions using a CEMS system, as approved under 40 CFR Part 75.

The Project is subject to the Acid Rain Program based on the provisions of 40 CFR 72.6(a)(3) because the turbines are considered utility units under the program definition and they do not meet the exemptions listed under paragraph (b) of this Section. The Project will be required to submit an acid rain permit application at least 24 months prior to the date on which the affected unit commences operation. OCE will submit an acid rain permit application in compliance with these requirements prior to this deadline.

3.7 Cross-State Air Pollution Rule

On March 10, 2005, USEPA issued the Clean Air Interstate Rule (CAIR) which requires reductions in emissions of NO_x and SO_2 from large fossil fueled electric generating units using a cap and trade system. The rule provides both annual emissions budgets and an ozone season emission budget for each state. On July 11, 2008, the U.S. Court of Appeals for the D.C. Circuit (the Court) issued an opinion vacating and remanding these rules. However, on December 23, 2008, the Court granted rehearing only to the extent that it remanded the rules to USEPA without vacating them. The December 23, 2008 ruling leaves CAIR in place until the USEPA issues a new rule to replace CAIR in accordance with the July 11, 2008 provisions. On July 6, 2011, the USEPA issued the Cross-State Air Pollution Rule (CSAPR) which replaced CAIR. Ohio power generation sources of 25 MW or greater would be subject to this rule. CSAPR was to go into effect January 1, 2012 and would have imposed new cap-and-trade programs for ozone season NO_x, annual NO_x, and annual SO_2 emissions. However, a ruling issued by the Court on December 30, 2011 stayed CSAPR until further resolution of petitions filed by several entities. On August 21, 2012, the Court vacated CSPAR and ruled that the former CAIR remain in effect until a viable replacement to CSAPR is made. Under CSAPR, electric

generating facilities in Ohio would have been required to obtain allowances for ozone season NO_x, annual NO_x, and annual SO_2 emissions.

Under CAIR, assets holding excess allowances will be able to sell or trade allowances to those without sufficient allowances. The Project will comply with the rules currently in effect at the time of operational start.

3.8 State Regulations

In addition to regulations already discussed in preceding sections, state regulations that pertain to this facility are listed in Table 3-2. Titles shown in capital letters in the table are permits, notifications, and/or reports that will be needed for construction and operation of this facility.

Table 3-2: Ohio EPA Applicable Regulations

RULE	DESCRIPTION
OAC 3745-17-07	Control of visible particulate emissions from stationary sources
OAC 3745-17-10	Restrictions on particulate emissions from fuel burning equipment
OAC 3745-18-06	General emission limit provisions for sulfur dioxide
OAC 3745-21-07	Control of emissions of organic materials from stationary sources
OAC 3745-21-09	Control of emissions of volatile organic compounds from stationary sources
OAC 3745-23-06	Control of nitrogen oxides emissions from stationary sources
OAC 3745-25-03	Emission control action programs
OAC 3745-31	PERMIT TO INSTALL NEW SOURCES OF POLLUTION
OAC 3745-71-02	Emissions test methods and procedures for new and existing sources

RULE	DESCRIPTION
OAC 3745-77	TITLE V PERMITS
OAC 3745-100	TOXIC CHEMICAL RELEASE REPORTING
OAC 3745-103	ACID RAIN PERMITS AND COMPLIANCE
OAC 3745-104	ACCIDENTAL RELEASES PREVENTION PROGRAM

Federal authority is delegated to the State of Ohio, and all permit applications will be submitted to Ohio EPA through the delegated local permitting agency. In Lucas County, the TES in Toledo, Ohio will handle these permit applications. The Permit to Install (PTI) will serve as the air construction permit and initial operating permit for emission testing purposes. As explained in preceding sections, the following list of air permits is applicable to the proposed facility:

1) OEPA PTI: OAC Chapter 3745-31 – Permit to Install New Source of Pollution. The PTI will serve as the submission vehicle for the preconstruction permit.

2) Title V Permit: OAC Chapter 3745-77 – Title V Permits

3) Acid Rain Permit: OAC Chapter 3745-103 – Title IV Acid Rain Permits and Compliance

4. CONTROL TECHNOLOGY EVALUATION – BACT/BAT

Control technology evaluations for new major stationary sources involve an evaluation of BACT for pollutants subject to PSD pre-construction review and State of Ohio BAT for other pollutants not subject to PSD. A control technology analysis has been performed for the proposed facility based upon the USEPA guidance document New Source Review Workshop Manual (USEPA, 1990). The PSD and State of Ohio BAT requirements for each pollutant were defined in Section 3.0 of this application, and are briefly summarized in the sections below.

4.1 Regulatory Applicability of Control Requirements

This section provides a brief summary of the control technology requirements under the PSD and state of Ohio permitting programs for each pollutant. Control technology requirements are generally based on the potential emissions from the new or modified source and the attainment status of the area in which the source is located. A detailed determination of applicable regulatory requirements under PSD rules are provided in Section 3.0. The following sections discuss the applicability of BACT and BAT requirements for emissions from the equipment associated with the project.

4.1.1 PSD Pollutants Subject to BACT/BAT

Pollutants subject to PSD review are subject to a BACT analysis. The proposed Project is considered a major source for PSD purposes since potential emissions exceed major source thresholds. Therefore, individual pollutants are subject to BACT requirements if their potential emissions exceed the Significant Emission Rates presented in Table 1-1. As shown in this table, the Project is subject to PSD review for the criteria pollutants: NO_2, CO, VOC, SO_2, H_2SO_4, CO_2 and $PM_{10}/PM_{2.5}$ and is therefore required to implement BACT for these pollutants. Criteria pollutants for which BACT is not required to be implemented are subject to BAT.

As described in Section 3.3 of this report, sources with pollutants meeting certain other standards also meet BAT. For pollutants subject to BACT requirements, compliance with BACT meets BAT requirements. For HAPs subject to MACT, compliance with MACT meets BAT requirements. For pollutants subject to NSPS, compliance with NSPS represents BAT. Sources subject to BAT may comply with the levels achieved by similar sources or may conduct a case-by-case BAT determination using a “top down” approach, similar to a BACT analysis. BAT for non-criteria or air toxic pollutants are addressed by an

"Option A" evaluation described in Section 3.3. The evaluation will be included in the Air Dispersion Report submitted for the Project.

4.1.2 Emission Units Subject to BACT Analyses

For a facility subject to a BACT analysis, each pollutant emitted in amounts greater than the regulatory thresholds are subject to a prescribed level of control technology review for each emission unit that emits that pollutant. For the proposed Project, the source responsible for the majority of the Project's emissions will be the combined cycle combustion turbines with supplemental duct burning. Therefore, the primary focus of the BACT analyses presented in the following sections is on the combined cycle combustion turbines. Evaluation of the ancillary equipment is conducted consistent with proposed small annual emission levels and with limited hours of operation.

4.2 BACT Analysis Approach

The sections below outline the approach used to conduct the BACT/BAT analyses presented in this application.

4.2.1 Best Available Control Technology

BACT is defined as the optimum level of control applied to a pollutant emissions based upon consideration of energy, economic and environmental factors. In a BACT analysis, the energy, environmental, and economic factors associated with each alternate control technology are evaluated, as necessary, in addition to the benefit of reduced emissions that each technology would provide. The BACT analyses presented in the following sections consist of up to four steps as outlined below.

4.2.1.1 Identification of Technically Feasible Control Options

The first step in a BACT analysis is the identification of technically feasible and available control technology options, including consideration of transferable and innovative control measures that may not have been previously applied to the source type under analysis. The minimum requirement for a BACT proposal is an option that meets federal NSPS limits or other minimum state or local requirements, such as RACT or Ohio EPA emission standards. After elimination of technically infeasible control technologies, the remaining options are ranked by control effectiveness.

If there is only a single feasible option, or if the most stringent alternative is proposed, then no further analysis is required. Technical considerations and site-specific sensitive issues will often play a role in BACT determinations. Generally, if the most stringent technology is rejected as BACT, the next most stringent technology is evaluated and so on.

In order to identify options for each class of equipment, a search of the USEPA's RACT/BACT/LAER Clearinghouse (RBLC) database was performed. Individual searches were performed for each pollutant emitted from each emission unit. The most recently issued permits from Ohio and other permits listed on the RBLC were also analyzed if available. Information was found for several hundred large combined cycle power plant projects permitted in the past decade. Appendix C provides a summary of recent similar energy projects from around the country. Less recent projects were also included due to regional proximity and/or very stringent emission limits. Using these criteria, lists for each pollutant for each equipment source were compiled and are presented in Appendix C.

If two or more technically feasible options are identified, the next three steps (as presented below) are applied to identify and compare the economic, energy and environmental impacts of the options.

4.2.1.2 Economic (Cost-Effectiveness) Analysis

This analysis consists of an estimation of cost and calculation of the cost-effectiveness of each control technology, on a dollar per ton of pollution removed basis. Annual emissions with a control option are subtracted from base case emissions to calculate tons of pollutant controlled per year. The base case may be uncontrolled emissions or the maximum emission rate allowed with BACT considerations (such as an NSPS or RACT limit). Annual costs are calculated by adding annual operation and maintenance costs to the annualized capital cost of a control option. Cost-effectiveness (dollars per ton) of a control option is the annual cost (dollars per year) divided by the annual reduction in emissions (tpy). If either the most effective control option is proposed, or if there are no technically feasible control options, an economic analysis is not required.

4.2.1.3 Energy Impact Analysis

Two types of energy impacts are normally considered quantifiable. First, when the installation of a particular option would result in a reduction in either the power output capacity or reliability of a unit, this reduction is a quantifiable energy impact. Second, the consumption of energy by the control option itself is a quantifiable energy impact. These

impacts can be quantified by either an increase in fuel consumption due to reduced efficiency or fuel consumption to power the equipment.

4.2.1.4 Environmental Impact Analysis

The primary focus of the environmental impact analysis is the reduction in ambient concentrations of the pollutant being emitted. Increases or decreases in emissions of other criteria or non-criteria pollutants may occur with some technologies and should be identified. Non-air related impacts such as solid waste generation, increased water consumption or waste water generation may also be an issue associated with a control option. These additional impacts should be identified and qualitatively or quantitatively evaluated.

4.3 BACT Analysis for NO_x

NO_x is formed during the combustion of fuel and is generally classified as either thermal NO_x or fuel-related NO_x. Thermal NO_x results when atmospheric nitrogen is oxidized at high temperatures to produce nitrogen oxide (NO), NO_2, and other oxides of nitrogen. The major factors influencing the formation of thermal NO_x are temperature, concentrations of oxygen in the inlet air and residence time within the combustion zone. Fuel-related NO_x is formed from the oxidation of chemically bound nitrogen in the fuel. Fuel-related NO_x is generally minimal for natural gas combustion. As such, NO_x formation from combustion of natural gas is due mostly to thermal NO_x formation.

Reduction in NO_x formation can be achieved using combustion controls and/or flue gas treatment. Available combustion controls include water or steam injection and low emission combustors. Typical gas turbines are designed to operate at a nearly stoichiometric ratio of fuel in the combustion zone, with additional air introduced downstream. Fuel-to-air ratios below stoichiometric are referred to as fuel-lean mixtures. This type of fuel mixture limits the formation of NO_x because there is lower flame temperature with a lean fuel mixture. Using this concept, lean combustors are designed to operate below the stoichiometric ratio, thereby reducing the thermal NO_x formation within the combustion chamber.

The turbines proposed for the Project utilize a lean fuel technology. In addition, exhaust gases from the turbine (and duct burner) will exhaust through an SCR system (discussed below) to further reduce NO_x emissions to 2.0 ppm_v at 15 percent O_2, with and without duct burning.

The Project will also utilize an auxiliary boiler. The auxiliary boiler will utilize flue gas recirculation and low-NO_x burner technology, two combustion optimization techniques that also reduce the formation of NO_x. Using these enhanced combustion techniques, emissions from the auxiliary boiler will be limited to 0.01 lb/MMBtu.

The following discussion will demonstrate that the proposed NO_x emission rates for the combined cycle turbines and auxiliary boiler are considered BACT.

4.3.1 Identification of Control Options

SCR is an add-on NO_x control technology that is placed in the exhaust stream following the gas turbine/duct burner. SCR involves the injection of ammonia into the exhaust gas upstream of a catalyst bed. On the catalyst surface, NH_3 reacts with the NO_x contained within the flue gas to form nitrogen gas and water in accordance with the following chemical reactions:

$$4NH_3 + 4NO + O_2 \rightarrow 4N_2 + 6H_2O$$

$$8NH_3 + 6NO_2 \rightarrow 7N_2 + 12H_2O$$

The catalyst's active surface is usually a noble metal (platinum), base metal (titanium or vanadium) or a zeolite-based material. Metal-based catalysts are usually applied as a coating over a metal or ceramic substrate. Zeolite catalysts are typically a homogeneous material that forms both the active surface and the substrate. NH_3 is fed and mixed into the combustion gas upstream of the catalyst bed in greater than stoichiometric amounts to achieve maximum conversion of NO_x. Excess NH_3 which is not reacted in the catalyst bed is subsequently emitted through the stack; this is called "ammonia slip."

An important factor that affects the performance of an SCR system is the operating temperature. The optimal temperature range for standard base metal catalysts is between 400°F and 800°F. Because the optimal temperature is below the CTG exhaust temperature but above the stack exhaust temperature, the catalyst needs to be located within the HRSG.

An undesirable side effect of the use of SCR systems is the potential for formation of ammonium bisulfate and ammonium sulfate, referred to as ammonium salts. These salts are reaction products of SO_3 and NH_3. Ammonium salts are corrosive and can stick to the heat exchanger surfaces, duct work or the stack at low temperatures. In addition, ammonia salts are considered $PM_{10}/PM_{2.5}$, and, therefore, increase the emissions of these

criteria pollutants. Use of low sulfur fuels such as natural gas minimizes the formation of SO_3 and the subsequent formation of these ammonium salts.

4.3.2 Search of RBLC Determinations

4.3.2.1 Combustion Turbine Generators and Duct Burners

The search of the RBLC and other available permits identified several natural gas fired combined cycle combustion turbine projects. As described previously, representative projects were selected based upon recent decisions, local proximity, or stringent limits. Details for representative facilities are presented in Appendix C. The lowest permitted NO_x limit for a natural gas fired combined cycle turbine with duct burning was 2.0 ppm_v at 15 percent O_2. All of these projects use SCR systems in combination with combustion optimization technology such as low-NO_x burners. It is our understanding that several of these projects have demonstrated compliance with the 2.0 ppm_v emission limits under primary operating modes. Some of these projects have permit limits above 2.0 ppm_v to accommodate alternative operating modes such as duct burning.

In general, BACT determinations have focused on the level that can be achieved in the primary operating mode (typically gas-fired 100 percent load), with NO_x levels being set for alternative modes (duct burning, partial load, etc.) at the levels that result from application of the same degree of control used to achieve BACT in the primary mode.

4.3.2.2 Auxiliary Boiler

The RBLC and recent air permit search for natural gas-fired boilers between 10 and 100 MMBtu/hr in size identified close to 100 installations. NO_x emission limits for these boilers widely range from approximately 0.009 lb/MMBtu to 0.08 lb/MMBtu. Details on approximately 40 of the installations that were determined to be most representative for the proposed boiler are provided in Appendix C. The projects with emission limits less than 0.011 lb/MMBtu are generally industrial/commercial boilers less than 30 MMBtu/hr that are operated continuously to support industrial processes or other operations; these were not considered relevant to the project. Beyond these projects, other determinations generally proposed NO_x emission limits greater than 0.03 lb/MMBtu. The most recent determination for an auxiliary boiler in Ohio proposed a NO_x emission limit of 0.037 lb/MMBtu.

4.3.3 BACT Determinations

4.3.3.1 Combustion Turbine Generators and Duct Burners

OCE is proposing a NO_x emission limit of 2.0 ppm_v at 15 percent O_2 (with and without duct burning) as BACT for the proposed Project. This level of emissions will be achieved through the application of DLN burners in combination with SCR. This emission level is consistent with the most stringent level of control found during the RBLC search and has been demonstrated in practice.

4.3.3.2 Auxiliary Boiler

OCE is proposing a NO_x emission limit of 0.01 lb/MMBtu. The auxiliary boiler will use flue gas recirculation in combination with low-NO_x burners. These technologies, used in combination, are capable of reducing NO_x emissions by 60 to 90 percent. This limit is consistent with the results from the RBLC database search.

4.4 BACT Analysis for VOC

Combustion turbines have inherently low VOC emission rates. Emissions of VOC from a combustion turbine occur as a result of incomplete combustion of organic compounds within the fuel. In an ideal combustion process, all carbon and hydrogen contained within the fuel are oxidized to form CO_2 and water. VOC emissions can be minimized by the use of good combustion controls and add-on controls as described below.

The turbines proposed for the project will utilize good combustion controls and exhaust through an oxidation catalyst to further reduce VOC emissions. Emissions of VOC from the exhaust stack will be limited to 1.0 ppm_v at 15 percent O_2 without duct burning and 3.5 ppm_v with duct burning.

The Project will also utilize an auxiliary boiler. The auxiliary boiler will utilize combustion optimization technologies to minimize incomplete combustion and subsequent emissions of VOC. Using good combustion controls, emissions from the auxiliary boiler will be limited to 0.004 lb/MMBtu.

4.4.1 Identification of Control Options

There are only two practical methods for controlling VOC emissions from combustion processes: efficient combustion and add-on control equipment. The most stringent level of control is through the use of add-on control equipment. The only post-combustion control that can be practically implemented is catalytic oxidation. Oxidation catalyst systems consist of a passive reactor comprised of a grid of metal panels with a platinum catalyst. The optimal location for VOC control, in the 900°F to 1,100°F temperature range, would be upstream of the HRSG or in the front-end section of the HRSG. However, at the high temperatures necessary to make the oxidation catalyst optimized for VOC reduction, there is the undesirable result of causing substantially more conversion of SO_2 to SO_3. As described previously, SO_3 may react with water and/or NH_3 to form H_2SO_4 and/or ammonium salt (PM_{10}/$PM_{2.5}$). Therefore, the placement of the oxidation catalyst in the "cooler" section of the HRSG, which is necessary for CO control, is the optimal design.

VOC emissions from the auxiliary boiler will also occur due to incomplete combustion. As such, VOC emissions are minimized by combustion practices that promote high combustion temperatures, long residence times, and turbulent mixing of fuel and combustion air. In practice, post-combustion control methods are not routinely implemented for the reduction of VOC emissions from auxiliary boilers, as supported by the search of the RBLC determinations presented below.

4.4.2 Search of RBLC Determinations

4.4.2.1 Combustion Turbine Generators and Duct Burners

The search of the RBLC and other available permits identified many natural gas-fired combined cycle combustion turbine projects. Details for approximately 30 of these facilities have been included in Appendix C. Based on this search, use of an oxidation catalyst appears to be the most stringent level of VOC control for natural gas fired combined cycle turbines. VOC limits range from 0.7 ppm_v to 6 ppm_v. The variation in VOC concentrations between different projects is not unexpected due to differences in turbine and HRSG manufacturers and overall engineering design. Based on the review of the RBLC, BAT for VOC is utilization of an oxidation catalyst system to achieve an outlet VOC concentration in the 1 to 3.5 ppm_v range.

4.4.2.2 Auxiliary Boiler

The RBLC and recent air permit search for natural gas fired boilers between 10 and 100 MMBtu/hr in size identified close to 100 installations. VOC emission limits for these installations range from approximately 0.002 lb/MMBtu to 0.08 lb/MMBtu. Details on approximately 30 of the installations that were determined to be most applicable to the proposed boiler are provided in Appendix C.

The most recent determination in the database is for a commercial boiler with a VOC BACT limit of 0.0054 lb/MMBtu. Most of the boilers that operate in a similar manner to the proposed boiler also have operational restrictions on hours. There are several determinations for auxiliary boilers at energy generating facilities in the database. The majority of the installations have emission limits of 0.005 lb/MMBtu or greater. Based on the review of the RBLC, BAT for VOC is good combustion practices to achieve a VOC emission limit in the 0.004 to 0.005 lb/MMBtu range.

4.4.3 BACT Determinations

4.4.3.1 Combustion Turbine Generators and Duct Burners

OCE is proposing a VOC emission limit of 1.0 ppm_v at 15 percent O_2 without duct burning and 3.5 ppm_v at 15 percent O_2 while duct burning as BACT for the proposed Project. This level of emissions will be achieved via good combustion control and an oxidation catalyst.

4.4.3.2 Auxiliary Boiler

OCE is proposing a VOC emission limit of 0.004 lb/MMBtu from the auxiliary boiler using good combustion practices.

4.5 BACT Analysis for CO

Emissions of CO from combustion occur as a result of incomplete combustion of fuel. CO emissions are minimized by the use of proper combustor design, good combustion practices and add-on controls. The combined cycle turbines and the auxiliary boiler will be sources of CO emissions. Since the potential emissions from the project exceed PSD significance thresholds, BACT is required for CO emissions. As indicated previously, pollutants that comply with BACT meet BAT requirements.

The turbines proposed for the Project will utilize good combustion controls and exhaust through an oxidation catalyst to reduce CO emissions. Emissions of CO from the exhaust stack will be limited to 2.0 ppm_v at 15 percent O_2 with and without duct burning.

The auxiliary boiler will utilize good combustion practices to minimize incomplete combustion and subsequent emissions of CO. Using good combustion controls, emissions from the auxiliary boiler will be limited to 0.037 lb/MMBtu.

The following discussion demonstrates that the proposed CO emission rates for the combined cycle turbines and auxiliary boiler are considered BACT.

4.5.1 Identification of Control Options

There are only two practical methods for controlling CO emissions from combustion processes: efficient combustion and add-on control equipment. The most stringent level of control is the use of add-on equipment. The only post-combustion control that can be practically implemented is catalytic oxidation. Oxidation catalyst systems consist of a passive reactor comprised of a grid of metal panels with a platinum catalyst. CO reduction efficiencies in the range of 80 to 90 percent can be expected, although CO reduction may at times be less than these values due to the low inlet concentrations expected from the turbines.

CO emissions from the auxiliary boiler will also occur due to incomplete combustion. As such, combustion design that promotes high combustion temperatures, long residence times, and turbulent mixing of fuel and combustion air is the common practice used to minimize CO emissions. Although it is technologically feasible to control CO emissions from a boiler in the 10 to 100 MMBtu/hr size range using an oxidation catalyst, current combustion technology results in very low emissions of CO such that add-on control would not be considered cost-effective.

4.5.2 Search of RBLC Determinations

4.5.2.1 Combustion Turbine Generators and Duct Burners

The search of the RBLC available permits identified almost 300 natural gas fired combined cycle combustion turbine projects. Based on this search, use of an oxidation catalyst appears to be the most stringent level of control for natural gas fired combined cycle turbines.

CO emission limits from recently permitted projects generally ranged from 0.9 ppm_v to 15 ppm_v (or greater). The lowest CO limit found in a permit for a natural gas fired combined cycle turbine was 0.9 ppm_v without duct burning and 1.8 ppm_v with duct burning, issued to Kleen Energy Systems in Connecticut. While the duct burning limit is consistent with other determinations, the 0.9 ppm_v limit is an outlier. It is important to note that Kleen Energy has a VOC BACT limit of 5.0 ppm_v, which is significantly higher than the proposed VOC limit for the Project. This is indicative of the fact that it is difficult to design a system that provides a very high level of control for CO while simultaneously providing a very high level of control for VOC. As such, systems are more commonly designed to provide substantial control for both CO and VOC simultaneously. This is illustrated by two recent BACT/LAER determinations for proposed combined-cycle power plants in New Jersey. Draft permits for the Woodbridge Energy Center and the Newark Energy Center were issued in June 2012. Both facilities proposed CO BACT limits of 2.0 ppm_v and VOC LAER limits of 1.0 ppm_v (without duct burning) For these facilities, the turbine train was designed to optimize control of both CO and VOC. There are many facilities in the RBLC with recently permitted BACT CO emission limits of 2.0 ppm_v (or greater). For example, the Empire Generating and Caithness Long Island Energy projects in New York State have permit limits of 2.0 ppm_v for CO, which is considered representative of BACT. It is our understanding that several of these facilities are operating in compliance with their 2.0 ppm_v limit.

4.5.2.2 Auxiliary Boiler

The RBLC and recent air permit search for natural gas-fired boilers between 10 and 100 MMBtu/hr in size identified close to 100 installations. CO emission limits for these installations range from approximately 0.0073 lb/MMBtu to 0.08 lb/MMBtu. Details on approximately 30 of the installations that were determined to be most applicable to the proposed boiler are provided in Appendix C.

The most stringent limit for an auxiliary boiler at an energy generating facility is 0.0164 lb/MMBtu at Emery Generating Station in Iowa, which was permitted in 2002. This installation is operational and it utilizes a catalytic oxidizer with an estimated control efficiency of 80 percent to achieve this emission rate. Since this installation, there have been many projects permitted without add-on controls that utilize good combustion practices to achieve CO control. The most recent auxiliary boiler installation listed in the RBLC has a CO limit of 0.15 lb/MMBtu. There are several other recent determinations with CO limits between 0.02 and 0.04 lb/MMBtu. These installations also utilize good combustion practices to control CO emissions.

4.5.3 BACT Determinations

4.5.3.1 Combustion Turbine Generators and Duct Burners

OCE is proposing a CO emission limit of 2.0 ppm_v at 15 percent O_2 with and without duct burning as BACT for the proposed project. This level of emissions will be achieved via good combustion control and an oxidation catalyst. This proposal is consistent with the limits and control technologies found in the RBLC and with recent BACT determinations in Ohio and in other states.

4.5.3.2 Auxiliary Boiler

OCE is proposing a CO emission limit of 0.037 lb/MMBtu from the auxiliary boiler using good combustion practices. This is consistent with BACT determinations for this type of equipment.

4.6 BACT Analysis for Particulate Matter ($PM_{10}/PM_{2.5}$)

Emissions of particulate matter from combustion occur as a result of inert solids contained in the fuel, unburned fuel hydrocarbons which agglomerate to form particles, and mineral matter in water that may be injected for NO_x control during diesel firing. Particulate emissions can also result from the formation of ammonium sulfates due to the conversion of SO_2 to SO_3, which is then available to react with ammonia to form ammonium sulfate. All of the particulate matter emitted from the turbines is conservatively assumed to be less than 2.5 microns in diameter. Therefore, PM_{10} and $PM_{2.5}$ emission rates are assumed to be the same.

The combustion of clean burning fuels is the most effective means for controlling particulate emissions from combustion equipment. The project is proposing to use natural gas as the only fuel for the turbines. Natural gas is a very clean burning fuel with very low associated particulate emissions. OCE is not aware of any combustion turbine projects in existence that have add-on particulate control.

The turbines proposed for the project will utilize natural gas as their only fuel to minimize particulate emissions. Emissions of $PM_{10}/PM_{2.5}$ from the exhaust stack will be limited to 0.0049 lb/MMBtu without duct burning and 0.0065 lb/MMBtu with duct burning.

The Project will also utilize an auxiliary boiler. The auxiliary boiler will combust only natural gas, resulting in a $PM_{10}/PM_{2.5}$ emission limit of 0.005 lb/MMBtu. The cooling tower will

also be a source of $PM_{10}/PM_{2.5}$ emissions. The Project is proposing use of a high efficiency drift eliminator (0.0005%).

The following discussion will demonstrate that the proposed $PM_{10}/PM_{2.5}$ emission rates for the combined cycle turbines and auxiliary boiler are considered BACT.

4.6.1 Search of RBLC Determinations

4.6.1.1 Combustion Turbine Generators and Duct Burners

The search of the RBLC and other available permits identified over 300 natural gas fired combined cycle combustion turbine projects. Based on this search, use of clean burning fuels is the primary control for particulate emissions. Particulate matter emission limits in the RBLC database generally ranged from approximately 0.003 lb/MMBtu to 0.3 lb/MMBtu (or greater). The lowest $PM_{10}/PM_{2.5}$ limit found in a permit for an F-series natural gas fired combined cycle turbine was 0.0051 lb/MMBtu, which was issued to Kleen Energy Systems in Connecticut. Similarly, Caithness Long Island Energy has a limit of 0.0055 lb/MMBtu. Beyond these examples, there are many facilities in the RBLC with permitted BACT $PM_{10}/PM_{2.5}$ emission limits in the range of 0.006 lb/MMBtu to 0.01 lb/MMBtu. Generally, all of these projects utilize clean burning fuel as their primary control technology and their emission limits are based upon the overall quality of their commercial natural gas source.

4.6.1.2 Auxiliary Boiler

A review of the RBLC indicates that good combustion practices and clean burning fuels have typically been determined to be BACT for boilers. $PM_{10}/PM_{2.5}$ emission limits for natural gas fired boilers vary widely, ranging from 0.002 lb/MMBtu through 0.6 lb/MMBtu. $PM_{10}/PM_{2.5}$ emission limits for gas-fired auxiliary boilers of similar size are as low as 0.003 lb/MMBtu. The most recent listing in the RBLC for an auxiliary boiler proposed a $PM_{10}/PM_{2.5}$ limit of 0.005 lb/MMBtu.

4.6.1.3 Cooling Tower

A review of the RBLC provides very few entries for cooling towers, the most recent being in 2005. In the RBLC listings, BACT for PM_{10} and $PM_{2.5}$ was determined to be utilization of a high efficiency drift eliminator with a removal efficiency of 0.0005 percent. A removal efficiency of 0.0005 is the most effective drift eliminator commercially available.

4.6.2 BACT Determinations

4.6.2.1 Combustion Turbine Generators and Duct Burners

OCE is proposing a $PM_{10}/PM_{2.5}$ emission limit of 0.0049 lb/MMBtu lb/MMBtu without duct burning and 0.0065 lb/MMBtu with duct burning as BACT for the proposed project. This level of emissions will be achieved by combusting only commercially available, pipeline quality natural gas in the turbines. This emission level is consistent with the limits and control technologies found in the RBLC for recent BACT determinations in Ohio and in other states.

4.6.2.2 Auxiliary Boiler

OCE is proposing the exclusive use of clean-burning pipeline quality natural gas in conjunction with good combustion practices as BACT for the auxiliary boiler. The Project proposes a $PM_{10}/PM_{2.5}$ emission limit of 0.005 lb/MMBtu boiler using natural gas as the only fuel. This is consistent with other BACT determinations for this type of equipment.

4.6.2.3 Wet Cooling Tower

OCE is proposing use of a 0.0005 percent high efficiency drift eliminator as BACT and for PM_{10} and $PM_{2.5}$. This equates to hourly emission rate of 1.0 lb/hr for PM_{10} and $PM_{2.5}$. Use of high efficiency drift eliminators is consistent with recent BACT determinations in Ohio and in other states.

4.7 BACT Analysis for Sulfur Dioxide and Sulfuric Acid

Emissions of SO_2 are formed from the oxidation of sulfur in the fuel. Normally, all sulfur compounds contained in the fuel will oxidize, and virtually all will oxidize to form SO_2. A small percentage will oxidize to sulfur trioxide (SO_3) and sulfate (SO_4), dependent on a number of factors including: combustor design; temperature; pressure; oxygen level; and moisture level in the combustion zone and downstream in the combined-cycle system, exhaust stack, and ambient air proximate to the stack. After being formed, the SO_3 and SO_4 will react to form H_2SO_4 and sulfate particulate. SO_2 and H_2SO_4 emissions can be controlled using pre- and post-combustion controls. Pre-combustion controls involve the use of low sulfur fuels such as natural gas or ULSD. Post-combustion controls involve the use of add-on control technology such as wet and dry flue gas desulfurization (FGD) processes. Installation of such systems is an established technology principally on coal-fired and high sulfur oil-fired steam electric generation stations. However, FGD systems

are not practical for combustion turbines due to several factors including the large exhaust flow (and corresponding pressure drop) and the low inlet concentration in the flue gas. The use of natural gas and ULSD are the most common methods for controlling SO_2/H_2SO_4emissions from combustion turbines.

The turbines proposed for the Project will utilize natural gas as their only fuel to minimize SO_2 and H_2SO_4 emissions. Emissions of SO_2 and H_2SO_4 from the exhaust stack will be limited to 0.0015 lb/MMBtu and 0.0008 lb/MMBtu with and without duct burning, respectively.

The project will also utilize an auxiliary boiler. The auxiliary boiler will combust only natural gas, resulting in SO_2 and H_2SO_4 emission limits of 0.0007 lb/MMBtu and 0.00005 lb/MMBtu, respectively.

The following discussion will demonstrate that the proposed SO_2 and H_2SO_4 emission rates for the combined cycle turbines and auxiliary boiler are considered BACT.

4.7.1 Search of RBLC Determinations

4.7.1.1 Combustion Turbine Generators and Duct Burners

The search of the RBLC and other available permits identified more than 300 natural gas fired combined cycle projects. Based on this search, use of low sulfur fuels is the primary control for SO_2 emissions, with emission limits being dependent upon the sulfur content of the fuel and engine design. SO_2 emission limits in the RBLC generally ranged from 0.0003 lb/MMBtu to 0.01 lb/MMBtu (or greater). Most projects proposed limits in the range of 0.002 to 0.005 lb/MMBtu and utilized commercially available pipeline quality natural gas.

Similarly, a search of permits for natural gas-fired combined cycle units indicated H_2SO_4 emissions ranging from 0.0001 lb/MMBtu to 0.002 lb/MMBtu (or greater). Similar to SO_2, BACT for these sources was the use of low sulfur fuels and emission limits are dependent upon the sulfur content of the fuel and engine design.

4.7.1.2 Auxiliary Boiler

A review of the RBLC indicates that combustion of clean burning low-sulfur fuels has typically been determined to be BACT for SO_2 and H_2SO_4. The most stringent SO_2 emission limit for an auxiliary boiler found the RBLC was 0.0006 lb/MMBtu. The most

recent project listed in the RBLC proposes an SO_2 emission limit of 0.0009 lb/MMBtu. This limit is based upon the sulfur content of the natural gas supply.

A search of the RBLC for H_2SO_4 emissions only identified two boilers of similar size to the proposed auxiliary boiler. Of these listings, only one was for an auxiliary boiler at an energy facility. This project, CPV Saint Charles, proposed an H_2SO_4 limit of 0.0001 lb/MMBtu.

4.7.2 BACT Determinations

4.7.2.1 Combustion Turbine Generators and Duct Burners

OCE is proposing a SO_2 emission limit of 0.0015 lb/MMBtu (with and without duct burning) as BACT for the proposed project. This level of emissions will be achieved by combusting commercially available, pipeline quality natural gas with a maximum sulfur content of 0.5 grains per 100 standard cubic foot (scf) by weight in the combustion turbines. This emission level is consistent with the limits and control technologies found in the RBLC.

4.7.2.2 Auxiliary Boiler

OCE is proposing a SO_2 emission limit of 0.0007 lb/MMBtu as BACT for the proposed project. This is consistent with other BACT determinations for this type of equipment.

4.8 BACT Analysis for Greenhouse Gases

The principal GHGs associated with the project are CO_2, methane (CH_4), and nitrous oxide (N_2O). Because these gases differ in their ability to trap heat, one ton of CO_2 in the atmosphere has a different effect on warming than one ton of CH_4 or one ton of N_2O. For example, CH_4 and N_2O have 21 times and 298 times the global warming potential of CO_2, respectively. GHG emissions from the proposed Project are primarily attributable to combustion of fuels. The Project will not have any other industrial processes releasing GHGs. By far the greatest proportion of potential GHGs emissions are from CO_2. Trace amounts of CH_4 and N_2O, would be emitted in varying quantities depending on operating conditions. However, emissions of CH_4 and N_2O are negligible when compared to total CO_2 emissions, and would not be considered significant to climate change issues. In addition, as presented previously, the project is proposing to implement BACT for both VOC (expressed as CH_4) and NO_x, such that these pollutants are being effectively controlled. As such, the remainder of this section will focus on BACT for CO_2.

CO_2 is a product of combusting any carbon containing fuel, including natural gas. All fossil fuel contains significant amounts of carbon. During complete combustion, the fuel carbon is oxidized into CO_2 via the following reaction:

$$C + O_2 \rightarrow CO_2$$

Full oxidation of carbon in fuel is desirable because CO, a product of partial combustion, has long been a regulated pollutant and because full combustion results in more useful energy. In fact, emission control technologies required for CO emissions (oxidation catalysts) increase CO_2 emission by oxidizing CO to CO_2.

There are limited alternatives available for controlling CO_2. The USEPA has indicated in the document, *PSD and Title V Permitting Guidance for Greenhouse Gases,* that carbon capture and sequestration (CCS) should be considered in BACT analyses as a technically feasible add-on control option for CO_2. Currently, there are no combined cycle power plants utilizing CCS, and although theoretically feasible, this technology is not commercially available.

CCS requires three distinct processes:

1. Isolation of CO_2 from the waste gas stream;
2. Transportation of the captured CO_2 to a suitable storage location; and
3. Safe and secure storage of the captured and delivered CO_2.

The first step in the CCS process is capture of the CO_2 from the process in a form that is suitable for transport. There are several methods that may be used for capturing CO_2 from gas streams including chemical and physical absorption, cryogenic separation, and membrane separation. Only physical and chemical absorption would be considered technically implementable for a high volume, low concentration gas stream. Currently, there are no combined cycle power plants utilizing CO_2 absorption systems. As such, this technology, while theoretically feasible, has not been demonstrated in practice for combined cycle facilities. Even if it were commercially available, the cost for designing, installing and operating this type of capture system would be prohibitive. In addition, the costs of compressing the captured CO_2 to pressures needed for transportation would result in a large parasitic load to the facility, reducing its efficiency and increasing overall emissions of CO_2 and all other regulated pollutants on a per megawatt-hour basis.

The next step in the CCS process is transportation of the captured CO_2 to a suitable storage location. Currently CO_2 storage is available at only a very limited number of sites. Geologic conditions at the proposed project site are not suitable for carbon sequestration. OCE does not own or control any other sites that would be appropriate for CO_2 sequestration. The closest commercially available CO_2 sequestration site is in Saskatchewan Canada, over 1,700 miles from the project site. Accordingly, to remain a viable control technology, captured CO_2 would have to be transported to the storage site in order to achieve any environmental benefit. Pipelines are the most common method for transporting large quantities of CO_2 over long distances. There are currently approximately 3,600 miles of existing pipeline located in the United States. However, there is no existing pipeline located near the project site. As such, a CO_2 transportation pipeline would need to be constructed to tie into the existing pipeline structure. The cost for permitting and constructing this pressurized pipeline would be economically prohibitive.

Based upon the large costs associated with the capture, transportation and storage of CO_2, in addition to the large parasitic load, CCS is considered cost prohibitive and economically infeasible for the project.

Apart from CCS, the only other technology with the potential to reduce GHG from the proposed facility is pollution prevention or the use of inherently lower-emitting processes, practices and designs. Because emissions of CO_2 are directly related to the amount of fuel combusted, an effective means of reducing GHG emissions is through highly efficient combustion technologies. By utilizing more efficient technology, less fuel is required to produce the same amount of output electricity.

The Project is designed for baseload electricity generation and will utilize state-of-the-art combustion turbine technology in combined cycle mode. Combined cycle generation takes advantage of the waste heat from the combustion turbines, capturing that heat in the HRSG and generating steam which then powers a conventional steam turbine. Use of waste heat in this manner makes combined cycle projects considerably more efficient than conventional boiler technology.

The Project is proposing to use combustion turbines which utilize highly efficient combustion technology. In addition, the combustion turbines will combust natural gas as their only fuel source. Other fossil fuels generate a greater amount of CO_2 per megawatt-hour of power produced or MMBtu of fuel consumed. As such, using natural gas as the only fuel source effectively minimizes the production of CO_2 from combustion. The proposed project has a “Design Base Heat Rate” of approximately 6,687 British thermal

units per kilowatt-hour (Btu/kW-hr), HHV at ISO conditions (59°F, 71 percent relative humidity) with no duct firing.

4.8.1.1 Search of RBLC Determinations

OCE is aware of several projects that have been issued draft or final permits incorporating GHG requirements. These projects include:

- Russell City Energy Center (final permit)
- Cricket Valley Energy Center (draft permit)
- Lower Colorado River Authority (final permit)
- Woodbridge Energy Center (draft permit)
- Newark Energy Center (draft permit)

The GHG emissions limits in these permits are based upon engine efficiency expressed as heat rate and range from 7,522 to 7,730 Btu/kW-hr (operating at 100 percent load, ISO conditions without duct firing). Several of these permits also incorporate emission limits for CO_2 in lb CO_2/MW-hr. These limits range from 887 lb CO_2/MW-hr gross to 918 lb CO_2/MW-hr net, while combusting natural gas.

The heat rate limits for the above referenced projects incorporate a margin over the design heat rate to account for degradation over the life of the equipment. Documentation associated with Russell City Energy Center provides a methodology for determining a reasonable estimate of degradation. The Bay Area Air Quality Management District (BAAQMD) in California issued a permit in February 2010 for the Russell City Energy Center that included a BACT limit. Russell City is a proposed combined-cycle generating facility with a nominal capacity of 600 MW utilizing two Siemens F-class combustion turbines. In its analysis, the BAAQMD evaluated factors that could be reasonably expected to degrade the theoretical design efficiency of the turbines and increase the heat rate. They considered a number of factors including:

- A design margin to reflect that the equipment as constructed and installed may not fully achieve the assumptions that went into the design calculations;
- A reasonable performance degradation margin to reflect normal wear and tear; and
- A reasonable degradation margin based on normal wear and tear caused by variability in the operation of the auxiliary plant equipment.

Based on their analysis, BAAMD concluded that 12.8 percent was a reasonable compliance margin to add to the design base heat rate to develop a numerical BACT limit.
BACT Determination

The turbines operating in combined-cycle mode proposed for the Project have a design base heat rate of approximately 6,687 Btu/kW-hr at ISO HHV conditions with no duct firing. This value is superior to the efficiency proposed in the Russell City Energy Center BACT analysis and Cricket Valley Energy design base heat rate. Based upon this design, and adding a reasonable margin of compliance consistent with the BAAQMD analysis for Russell City Energy Center, OCE is proposing the following limits as BACT:

- 7,409 Btu/kW-hr HHV (ISO conditions without duct firing);and
- 896 lb CO_2/MW-hr gross (ISO conditions while firing natural gas).

These limits are consistent with recently permitted projects and can reasonably be assured under all operating scenarios. This level of emissions will be achieved through utilization of high efficiency, state-of-the-art, combustion turbine technology and combusting only commercially available, pipeline quality natural gas in the turbines.

4.9 Emission Limit and Control Technology Summaries

Tables 4-1 and 4-2 summarize the proposed emission limits and associated control technology for the Project.

Table 4-1: Summary of Proposed BACT/BAT Emission Limits and Associated Control Technologies for the Combustion Turbines

Pollutant	Emission Rate (lb/MMBtu)	Emission Rate (ppm_v) at 15% O_2	Control Technology	Represents
NO_x CT only CT w/ DB	0.0076 0.0077	2.0 2.0	DLN and SCR	BACT/BAT
VOC CT only CT w/ DB	0.0013 0.0048	1.0 3.5	Good combustion controls and oxidation catalyst	BACT/BAT
CO CT only CT w/ DB	0.0048 0.0048	2.0 2.0	Good combustion controls and oxidation catalyst	BACT/BAT
$PM_{10}/PM_{2.5}$ CT only CT w/ DB	0.0049 0.0065	n/a n/a	Low sulfur fuel	BACT/BAT
SO_2 CT only CT w/ DB	0.00015 0.00015	n/a n/a	Low sulfur fuel	BACT/BAT
H_2SO_4 CT only CT w/ DB	0.0008 0.0008	n/a n/a	Low sulfur fuel	BACT/BAT

Table 4-2: Summary of Proposed BACT/BAT Emission Limits and Associated Control Technologies for the Auxiliary Boiler

Pollutant	Emission Rate (lb/MMBtu)	Control Technology	Represents
NO_x	0.01	LNG and FGR	BACT/BAT
VOC	0.004	Good combustion controls	BACT/BAT
CO	0.037	Good combustion controls	BACT/BAT
$PM_{10}/PM_{2.5}$	0.005	Low sulfur fuel	BACT/BAT
SO_2	0.0007	Low sulfur fuel	BACT/BAT

5. REFERENCES

CARB, 1996. California Air Toxics Emission Factor Database (CATEF) 1996.

USEPA, 1990. *New Source Review Workshop Manual (Draft)*. October 1990.

USEPA, 1993. Alternative Control Techniques Document – NOx Emissions from Stationary Reciprocating Internal Combustion Engines. Office of Air and Radiation. EPA-453/R-93-032. July 1993.

USEPA, 2000. *Compilation of Air Pollutant Emission Factors AP-42, Fifth Edition, Volume I: Stationary Point and Area Sources*.

USEPS, 2010. "*PSD and Title V Permitting Guidance for Greenhouse Gases*", Office of Air Quality Planning and Standards, November 2010

VCAPCD, 2001. AB2588 Combustion Emission Factors 2001.

Figures

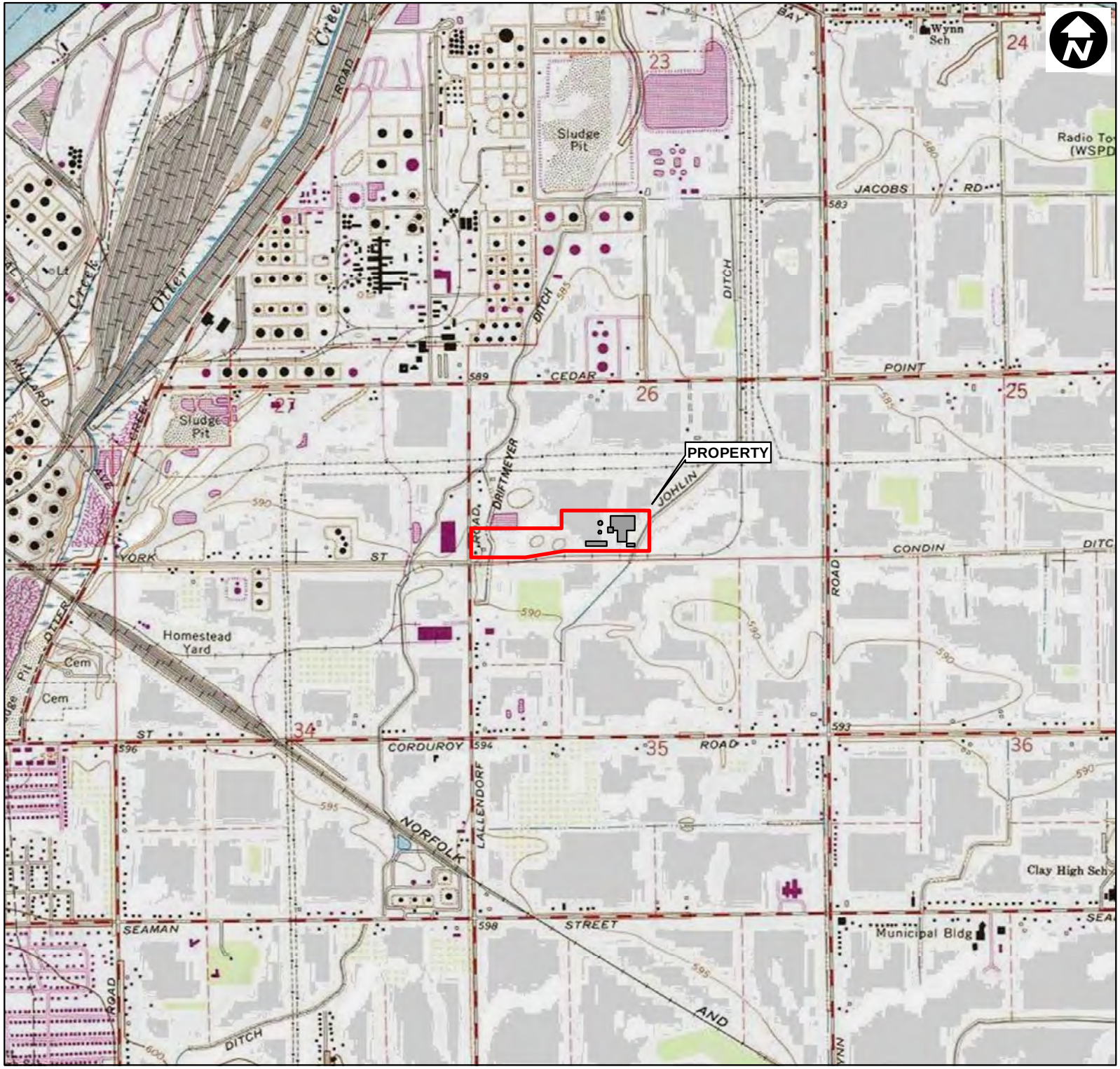

LUCAS COUNTY, OHIO

Legend

- Property Boundary
- Project Facilities

Topographic Base Image Source: ArcGIS Online Services, Access date: 08/17/2012, via ArcGIS v. 10. This image is not for re-sale or distribution outside of the use of this PDF.

0 1,000 2,000
Feet

ARCADIS

OREGON CLEAN ENERGY, LLC

FIGURE 1

PROJECT LOCATION

Lucas County, Ohio | **Date: 08/17/2012**

City: Chicago Author: MNesta Path: G:\AprojectGIS\OCE\MXD\OCE_ProjectLocation.mxd

Appendix A: Printout of Ohio EPA Permit Forms

PTI/PTIO Application A0045417
Oregon Clean Energy Center
0448020102
August 23, 2012

Division of Air Pollution Control

Aug 23 2012, 15:04:46

Application for Permit-to-Install or Permit-to-Install and Operate

This section should be filled out for each permit to install (PTI) or Permit to Install and Operate (PTIO) application. A PTI is required for all air contaminant sources (emissions units) installed or modified after January 1, 1974 that are subject to OAC Chapter 3745-77. A PTIO is required for all air contaminant sources (emissions units) that are not subject to OAC Chapter 3745-77 (Title V). See the application instructions for additional information.

For OEPA use only:		
	[X] Installation	[X] Request Federally enforceable restrictions
	[ ] Modification	[ ] General Permit
	[ ] Renewal	[ ] Other

1. Please summarize the reason for this permit application. This text will be in the public notice that will appear in the newspaper of the county where the facility is located.

   A permit-to-install (PTI) application is being submitted for the construction of the Oregon Clean Energy Center - a nominal 800 megawatt (MW) combined cycle gas turbine (CCGT) facility to be located in the City of Oregon, Lucas County, Ohio.

   Is the purpose of this application to transition from OAC Chapter 3745-77 (Title V) to OAC Chapter 3745-31 (PTIO)?

   No

2. **Establish PER Due Date** - Select an annual Permit Evaluation Report (PER) due date for this facility (does not apply to facilities subject to Title V, OAC Chapter 3745-77). If the PER has previously been established and a change is now desired, a PER Change Request form must be filed instead of selecting a date here.

   PER not applicable (Title V) or due date already established

3. **Federal Rules Applicability**

New Source Performance Standards (NSPS) *New Source Performance Standards are listed under 40 CFR 60 - Standards of Performance for New Stationary Sources.*	Subject to subpart: - Dc - Small Industrial Steam Generating Units - IIII - Stationary Compression Ignition Internal Combustion Engines - KKKK - Stationary Combustion Turbines
National Emission Standards for Hazardous Air Pollutants (NESHAP) *National Emissions Standards for Hazardous Air Pollutants are listed under 40 CFR 61. (These include asbestos, benzene, beryllium, mercury, and vinyl chloride).*	Not affected
Maximum Achievable Control Technology (MACT) *The Maximum Achievable Control Technology standards are listed under 40 CFR 63 and OAC rule 3745-31-28.*	Not affected
Prevention of Significant Deterioration (PSD) *These rules are found under OAC rule 3745-31-10 through OAC rule 3745-31-20.*	Subject to Regulation
Non-Attainment New Source Review *These rules are found under OAC rule 3745-31-21 through OAC rule 3745-31-27.*	Not affected
112 (r) - Risk Management Plan *These rules are found under 40 CFR 68.*	Not affected
Title IV (Acid Rain Requirements) *These rules are found under 40 CFR 72 and 40 CFR 73.*	Subject to Regulation

4. **Express PTI/PTIO** - Do you qualify for express PTI or PTIO processing?

   No

5. **Air Contaminant Sources in this Application** - Identify the air contaminant source(s) for which you are applying below. Attach additional pages if necessary. Section II of this application and an EAC form should be completed for each air

contaminant source.

Emissions Unit ID	**Company Equipment ID** (company's name for air contaminant source)	**Equipment Description** (List all equipment that are a part of this air contaminant source)
TMP173331	CTG #1	
TMP173332	CTG #2	
TMP173333	Auxiliary Boiler	
TMP173334	Emergency Generator	
TMP173335	Emergency Fire Pump	
TMP173336	Wet Cooling Tower	

The Emissions Unit ID would have been created when a previous air permit was issued. If no previous permits have been issued for this air contaminant source, leave this field blank. If this air contaminant source was previously identified in STARShip applications as a Z source (e.g., Z001), please provide that identification and a new ID will be assigned when the PTI/PTIO is issued.

6. **Trade Secret Information** - Is any information included in this application being claimed as a trade secret per Ohio Revised Code (ORC) 3704.08?

   No

7. **Permit Application Contact** - Person to contact for questions about this application:

Lynn Gresock		ARCADIS, US Inc.
Name		Title
One Executive Drive, Suite 303	Chelmsford, MA	01824
Street Address	City/Township, State	Zip Code
9783224520		lynn.gresock@ARCADIS-US.COM
Phone	Fax	E-mail

Section II - Specific Air Contaminant Source Information

Facility ID: 0448020102
Emissions Unit ID: TMP173331
Company Equipment ID: CTG #1

One copy of this section should be filled out for each air contaminant source (emissions unit) covered by this PTI/PTIO application identified in Section I, Question 5. See the application instructions for additional information.

1. **Air Contaminant Source Installation or Modification Schedule** Check all that apply (must be completed regardless of date of installation or modification):

New installation (for which construction has not yet begun, in accordance with OAC rule 3745-31-33). When will you begin to install the air contaminant source?
after installation permit has been issued

2. **SCC Codes** - List all Source Classification Code(s) (SCC) that describe the process(es) performed by this air contaminant source (e.g., 1-02-002-04).

See Facility Profile

3. **Emissions Information** - The following table requests information needed to determine the applicable requirements and the compliance status of this air contaminant source with those requirements. Suggestions for how to estimate emissions may be found in the instructions to the Emissions Activity Category (EAC) forms required with this application. If you need further assistance, contact your District Office/Local Air Agency representative.

- If total potential emissions of HAPs or any Toxic Air Contaminant (as identified in OAC rule 3745-114-01) are greater than 1 ton/yr, fill in the table for that (those) pollutant(s). For all other pollutants, if Emissions before controls (max), lb/hr multiplied by 24 hours/day is greater than 10 lbs/day, fill in the table for that pollutant.
- Actual emissions are calculated including add-on control equipment. If you have no add-on control equipment, Emissions before controls will be the same as Actual emissions.
- Actual emissions and Requested Allowable should be based on operating 8760 hr/yr unless you are requesting federally enforceable operating restrictions to limit emissions. If so, calculate emissions based on requested operating restrictions and describe in your calculations.
- If you use units other than lbs/hr or ton/yr, specify the units used (e.g., gr/dscf, lb/ton charged, lb/MMBtu, tons/12-months).
- Requested Allowable (ton/yr) is often equivalent to Potential to Emit (PTE) as defined in OAC rule 3745-31-01 and OAC rule 3745-77-01.

Pollutant	Emissions before controls (max)* (lb/hr)	Actual emissions (lb/hr)	Actual emissions (ton/year)	Requested Allowable (lb/hr)	Requested Allowable (ton/year)
Particulate emissions (PE/PM) (formerly particulate matter, PM)	19	19	83.2	19	83.2
PM # 10 microns in diameter (PE/PM10)	19	19	83.2	19	83.2
PM # 2.5 microns in diameter (PE/PM2.5)	19	19	83.2	19	83.2
Sulfur dioxide (SO2)	4.6	4.6	20.1	4.6	20.1
Nitrogen oxides (NOx)	460	23	100.7	23	100.7
Carbon monoxide (CO)	140	14	80.2	14	80.2
Organic compounds (OC)	130	13	59.3	13	59.3
Volatile organic compounds (VOC)	130	13	59.3	13	59.3
Lead (Pb)	0	0	0	0	0
Total Hazardous Air Pollutants (HAPs)	10.3	1.03	4.50	1.03	4.50

Highest single HAP	3	0.3	1.34	0.3	1.34

Hazardous Air Pollutants (HAPs):

Pollutant	Emissions before controls (max)* (lb/hr)	Actual emissions (lb/hr)	Actual emissions (ton/year)	Requested Allowable (lb/hr)	Requested Allowable (ton/year)
Toluene	3	0.3	1.3	0.3	1.3
Formaldehyde	3	0.3	1.34	0.3	1.34
Sulfuric Acid	2.47	2.47	10.8	2.47	10.8
Ammonia	21	21	92	21	92

4. **Best Available Technology (BAT)** - For each pollutant for which the Requested Allowable in the above table exceeds 10 tons per year, BAT, as defined in OAC 3745-31-01, is required. Describe what has been selected as BAT and the basis for the selection:

   See Section 4 - BACT/BAT analysis of the permit application document

5. **Control Equipment** - Does this air contaminant source employ emissions control equipment?
   See Facility Profile
6. **Process Flow Diagram** - Attach a Process Flow Diagram to this application for this air contaminant source. See the application instructions for additional information.
   Process Flow Diagrams:

Description	Type	EAC Form Type	Public Document Id
Process Flow Diagram_Rev	Process flow diagram		628569

7. **Modeling information: (Note: items in bold in Tables 7-A and/or 7-B, as applicable, are required even if the tables do not otherwise need to be completed. If applicable, all information is required** An air quality modeling analysis is required for PTIs and PTIOs for new installations or modifications, as defined in OAC rule 3745-31-01, where either the increase of toxic air contaminants from any air contaminant source or the increase of any other pollutant for all air contaminant sources combined exceed a threshold listed below. This analysis is to assure that the impact from the requested project will not exceed Ohios Acceptable Incremental Impacts for criteria pollutants and/or Maximum Allowable Ground Level Concentrations (MAGLC) for toxic air contaminants. (See Ohio EPA, DAPCs Engineering Guide #69 for more information.) Permit requests that would have unacceptable impacts cannot be approved as proposed. See the line-by-line PTI/PTIO instructions for additional information.
   See Facility Profile
8. **Request for Federally Enforceable Limits** - As part of this permit application, do you wish to propose voluntary restrictions to limit emissions in order to avoid specific requirements listed below, (i.e., are you requesting federally enforceable limits to obtain synthetic minor status)?
   No
9. **Continuous Emissions Monitoring** Does this air contaminant source utilize any continuous emissions monitoring (CEM) equipment for indicating or demonstrating compliance? This does not include continuous parametric monitoring systems.
   See Facility Profile
10. **EAC Forms** The appropriate Emissions Activity Category (EAC) form(s) must be completed and attached for each air contaminant source. At least one complete EAC form must be submitted for each air contaminant source for the application to be considered complete. Refer to the list attached to the application instructions. Please indicate which EAC form corresponds to this air contaminant source.
    Process Flow Diagrams:

Description	Type	EAC Form Type	Public Document

			Id
CTG #1	EAC	3862 Stationary Internal Combustion Engine (2003)	628322

Section II - Specific Air Contaminant Source Information

Facility ID: 0448020102
Emissions Unit ID: TMP173332
Company Equipment ID: CTG #2

One copy of this section should be filled out for each air contaminant source (emissions unit) covered by this PTI/PTIO application identified in Section I, Question 5. See the application instructions for additional information.

1. **Air Contaminant Source Installation or Modification Schedule** Check all that apply (must be completed regardless of date of installation or modification):

New installation (for which construction has not yet begun, in accordance with OAC rule 3745-31-33). When will you begin to install the air contaminant source?
after installation permit has been issued

2. **SCC Codes** - List all Source Classification Code(s) (SCC) that describe the process(es) performed by this air contaminant source (e.g., 1-02-002-04).

See Facility Profile

3. **Emissions Information** - The following table requests information needed to determine the applicable requirements and the compliance status of this air contaminant source with those requirements. Suggestions for how to estimate emissions may be found in the instructions to the Emissions Activity Category (EAC) forms required with this application. If you need further assistance, contact your District Office/Local Air Agency representative.

- If total potential emissions of HAPs or any Toxic Air Contaminant (as identified in OAC rule 3745-114-01) are greater than 1 ton/yr, fill in the table for that (those) pollutant(s). For all other pollutants, if Emissions before controls (max), lb/hr multiplied by 24 hours/day is greater than 10 lbs/day, fill in the table for that pollutant.
- Actual emissions are calculated including add-on control equipment. If you have no add-on control equipment, Emissions before controls will be the same as Actual emissions.
- Actual emissions and Requested Allowable should be based on operating 8760 hr/yr unless you are requesting federally enforceable operating restrictions to limit emissions. If so, calculate emissions based on requested operating restrictions and describe in your calculations.
- If you use units other than lbs/hr or ton/yr, specify the units used (e.g., gr/dscf, lb/ton charged, lb/MMBtu, tons/12-months).
- Requested Allowable (ton/yr) is often equivalent to Potential to Emit (PTE) as defined in OAC rule 3745-31-01 and OAC rule 3745-77-01.

Pollutant	Emissions before controls (max)* (lb/hr)	Actual emissions (lb/hr)	Actual emissions (ton/year)	Requested Allowable (lb/hr)	Requested Allowable (ton/year)
Particulate emissions (PE/PM) (formerly particulate matter, PM)	19	19	83.2	19	83.2
PM # 10 microns in diameter (PE/PM10)	19	19	83.2	19	83.2
PM # 2.5 microns in diameter (PE/PM2.5)	19	19	83.2	19	83.2
Sulfur dioxide (SO2)	4.6	4.6	20.1	4.6	20.1
Nitrogen oxides (NOx)	460	23	100.7	23	100.7
Carbon monoxide (CO)	140	14	80.2	14	80.2
Organic compounds (OC)	130	13	59.3	13	59.3
Volatile organic compounds (VOC)	130	13	59.3	13	59.3
Lead (Pb)	0	0	0	0	0
Total Hazardous Air Pollutants (HAPs)	10.3	1.03	4.5	1.03	4.5

Highest single HAP	3	0.3	1.34	0.3	1.34

Hazardous Air Pollutants (HAPs):

Pollutant	Emissions before controls (max)* (lb/hr)	Actual emissions (lb/hr)	Actual emissions (ton/year)	Requested Allowable (lb/hr)	Requested Allowable (ton/year)
Toluene	3	0.3	1.3	0.3	1.3
Formaldehyde	3	0.3	1.34	0.3	1.34
Sulfuric Acid	2.47	2.47	10.8	2.47	10.8
Ammonia	21	21	92	21	92

4. **Best Available Technology (BAT)** - For each pollutant for which the Requested Allowable in the above table exceeds 10 tons per year, BAT, as defined in OAC 3745-31-01, is required. Describe what has been selected as BAT and the basis for the selection:

   See Section 4 - BACT/BAT analysis of the permit application document

5. **Control Equipment** - Does this air contaminant source employ emissions control equipment?
   See Facility Profile
6. **Process Flow Diagram** - Attach a Process Flow Diagram to this application for this air contaminant source. See the application instructions for additional information.
   Process Flow Diagrams:

Description	Type	EAC Form Type	Public Document Id
Process Flow Diagram_Rev	Process flow diagram		628569

7. **Modeling information: (Note: items in bold in Tables 7-A and/or 7-B, as applicable, are required even if the tables do not otherwise need to be completed. If applicable, all information is required** An air quality modeling analysis is required for PTIs and PTIOs for new installations or modifications, as defined in OAC rule 3745-31-01, where either the increase of toxic air contaminants from any air contaminant source or the increase of any other pollutant for all air contaminant sources combined exceed a threshold listed below. This analysis is to assure that the impact from the requested project will not exceed Ohios Acceptable Incremental Impacts for criteria pollutants and/or Maximum Allowable Ground Level Concentrations (MAGLC) for toxic air contaminants. (See Ohio EPA, DAPCs Engineering Guide #69 for more information.) Permit requests that would have unacceptable impacts cannot be approved as proposed. See the line-by-line PTI/PTIO instructions for additional information.
   See Facility Profile
8. **Request for Federally Enforceable Limits** - As part of this permit application, do you wish to propose voluntary restrictions to limit emissions in order to avoid specific requirements listed below, (i.e., are you requesting federally enforceable limits to obtain synthetic minor status)?
   No
9. **Continuous Emissions Monitoring** Does this air contaminant source utilize any continuous emissions monitoring (CEM) equipment for indicating or demonstrating compliance? This does not include continuous parametric monitoring systems.
   See Facility Profile
10. **EAC Forms** The appropriate Emissions Activity Category (EAC) form(s) must be completed and attached for each air contaminant source. At least one complete EAC form must be submitted for each air contaminant source for the application to be considered complete. Refer to the list attached to the application instructions. Please indicate which EAC form corresponds to this air contaminant source.
    Process Flow Diagrams:

Description	Type	EAC Form Type	Public Document

			Id
CTG #2	EAC	3862 Stationary Internal Combustion Engine (2003)	628323

Section II - Specific Air Contaminant Source Information

Facility ID: 0448020102
Emissions Unit ID: TMP173333
Company Equipment ID: Auxiliary Boiler

One copy of this section should be filled out for each air contaminant source (emissions unit) covered by this PTI/PTIO application identified in Section I, Question 5. See the application instructions for additional information.

1. **Air Contaminant Source Installation or Modification Schedule** Check all that apply (must be completed regardless of date of installation or modification):

New installation (for which construction has not yet begun, in accordance with OAC rule 3745-31-33). When will you begin to install the air contaminant source?
after installation permit has been issued

2. **SCC Codes** - List all Source Classification Code(s) (SCC) that describe the process(es) performed by this air contaminant source (e.g., 1-02-002-04).

See Facility Profile

3. **Emissions Information** - The following table requests information needed to determine the applicable requirements and the compliance status of this air contaminant source with those requirements. Suggestions for how to estimate emissions may be found in the instructions to the Emissions Activity Category (EAC) forms required with this application. If you need further assistance, contact your District Office/Local Air Agency representative.

- If total potential emissions of HAPs or any Toxic Air Contaminant (as identified in OAC rule 3745-114-01) are greater than 1 ton/yr, fill in the table for that (those) pollutant(s). For all other pollutants, if Emissions before controls (max), lb/hr multiplied by 24 hours/day is greater than 10 lbs/day, fill in the table for that pollutant.
- Actual emissions are calculated including add-on control equipment. If you have no add-on control equipment, Emissions before controls will be the same as Actual emissions.
- Actual emissions and Requested Allowable should be based on operating 8760 hr/yr unless you are requesting federally enforceable operating restrictions to limit emissions. If so, calculate emissions based on requested operating restrictions and describe in your calculations.
- If you use units other than lbs/hr or ton/yr, specify the units used (e.g., gr/dscf, lb/ton charged, lb/MMBtu, tons/12-months).
- Requested Allowable (ton/yr) is often equivalent to Potential to Emit (PTE) as defined in OAC rule 3745-31-01 and OAC rule 3745-77-01.

Pollutant	Emissions before controls (max)* (lb/hr)	Actual emissions (lb/hr)	Actual emissions (ton/year)	Requested Allowable (lb/hr)	Requested Allowable (ton/year)
Particulate emissions (PE/PM) (formerly particulate matter, PM)	0.45	0.45	1.97	0.45	1.97
PM # 10 microns in diameter (PE/PM10)	0.45	0.45	1.97	0.45	1.97
PM # 2.5 microns in diameter (PE/PM2.5)	0.45	0.45	1.97	0.45	1.97
Sulfur dioxide (SO2)	0.06	0.06	0.28	0.06	0.28
Nitrogen oxides (NOx)	0.9	0.9	3.94	0.9	3.94
Carbon monoxide (CO)	3.33	3.33	14.59	3.33	14.59
Organic compounds (OC)	0.36	0.36	1.58	0.36	1.58
Volatile organic compounds (VOC)	0.36	0.36	1.58	0.36	1.58
Lead (Pb)	0	0	0	0	0
Total Hazardous Air Pollutants (HAPs)	0.008	0.008	0.04	0.008	0.04

Highest single HAP	0.007	0.007	0.029	0.007	0.029

4. **Best Available Technology (BAT)** - For each pollutant for which the Requested Allowable in the above table exceeds 10 tons per year, BAT, as defined in OAC 3745-31-01, is required. Describe what has been selected as BAT and the basis for the selection:

   See Section 4 - BACT/BAT analysis of the permit application document

5. **Control Equipment** - Does this air contaminant source employ emissions control equipment?
   See Facility Profile

6. **Process Flow Diagram** - Attach a Process Flow Diagram to this application for this air contaminant source. See the application instructions for additional information.
   Process Flow Diagrams:

Description	Type	EAC Form Type	Public Document Id
Process Flow Diagram_Rev	Process flow diagram		628569

7. **Modeling information: (Note: items in bold in Tables 7-A and/or 7-B, as applicable, are required even if the tables do not otherwise need to be completed. If applicable, all information is required** An air quality modeling analysis is required for PTIs and PTIOs for new installations or modifications, as defined in OAC rule 3745-31-01, where either the increase of toxic air contaminants from any air contaminant source or the increase of any other pollutant for all air contaminant sources combined exceed a threshold listed below. This analysis is to assure that the impact from the requested project will not exceed Ohios Acceptable Incremental Impacts for criteria pollutants and/or Maximum Allowable Ground Level Concentrations (MAGLC) for toxic air contaminants. (See Ohio EPA, DAPCs Engineering Guide #69 for more information.) Permit requests that would have unacceptable impacts cannot be approved as proposed. See the line-by-line PTI/PTIO instructions for additional information.
   See Facility Profile

8. **Request for Federally Enforceable Limits** - As part of this permit application, do you wish to propose voluntary restrictions to limit emissions in order to avoid specific requirements listed below, (i.e., are you requesting federally enforceable limits to obtain synthetic minor status)?
   No

9. **Continuous Emissions Monitoring** Does this air contaminant source utilize any continuous emissions monitoring (CEM) equipment for indicating or demonstrating compliance? This does not include continuous parametric monitoring systems.
   See Facility Profile

10. **EAC Forms** The appropriate Emissions Activity Category (EAC) form(s) must be completed and attached for each air contaminant source. At least one complete EAC form must be submitted for each air contaminant source for the application to be considered complete. Refer to the list attached to the application instructions. Please indicate which EAC form corresponds to this air contaminant source.
    Process Flow Diagrams:

Description	Type	EAC Form Type	Public Document Id
Aux. Boiler EAC	EAC	3101 Fuel burning operation (2003)	627123

Section II - Specific Air Contaminant Source Information

Facility ID: 0448020102
Emissions Unit ID: TMP173334
Company Equipment ID: Emergency Generator

One copy of this section should be filled out for each air contaminant source (emissions unit) covered by this PTI/PTIO application identified in Section I, Question 5. See the application instructions for additional information.

1. **Air Contaminant Source Installation or Modification Schedule** Check all that apply (must be completed regardless of date of installation or modification):

New installation (for which construction has not yet begun, in accordance with OAC rule 3745-31-33). When will you begin to install the air contaminant source?
after installation permit has been issued

2. **SCC Codes** - List all Source Classification Code(s) (SCC) that describe the process(es) performed by this air contaminant source (e.g., 1-02-002-04).

See Facility Profile

3. **Emissions Information** - The following table requests information needed to determine the applicable requirements and the compliance status of this air contaminant source with those requirements. Suggestions for how to estimate emissions may be found in the instructions to the Emissions Activity Category (EAC) forms required with this application. If you need further assistance, contact your District Office/Local Air Agency representative.

- If total potential emissions of HAPs or any Toxic Air Contaminant (as identified in OAC rule 3745-114-01) are greater than 1 ton/yr, fill in the table for that (those) pollutant(s). For all other pollutants, if Emissions before controls (max), lb/hr multiplied by 24 hours/day is greater than 10 lbs/day, fill in the table for that pollutant.
- Actual emissions are calculated including add-on control equipment. If you have no add-on control equipment, Emissions before controls will be the same as Actual emissions.
- Actual emissions and Requested Allowable should be based on operating 8760 hr/yr unless you are requesting federally enforceable operating restrictions to limit emissions. If so, calculate emissions based on requested operating restrictions and describe in your calculations.
- If you use units other than lbs/hr or ton/yr, specify the units used (e.g., gr/dscf, lb/ton charged, lb/MMBtu, tons/12-months).
- Requested Allowable (ton/yr) is often equivalent to Potential to Emit (PTE) as defined in OAC rule 3745-31-01 and OAC rule 3745-77-01.

Pollutant	Emissions before controls (max)* (lb/hr)	Actual emissions (lb/hr)	Actual emissions (ton/year)	Requested Allowable (lb/hr)	Requested Allowable (ton/year)
Particulate emissions (PE/PM) (formerly particulate matter, PM)	0.66	0.66	0.17	0.66	0.17
PM # 10 microns in diameter (PE/PM10)	0.66	0.66	0.17	0.66	0.17
PM # 2.5 microns in diameter (PE/PM2.5)	0.66	0.66	0.17	0.66	0.17
Sulfur dioxide (SO2)	0.02	0.02	0.01	0.02	0.01
Nitrogen oxides (NOx)	18.53	18.53	4.63	18.53	4.63
Carbon monoxide (CO)	11.56	11.56	2.89	11.56	2.89
Organic compounds (OC)	2.62	2.62	0.65	2.62	0.65
Volatile organic compounds (VOC)	2.62	2.62	0.65	2.62	0.65
Lead (Pb)	1.97E-04	1.97E-04	4.93E-05	1.97E-04	4.93E-05
Total Hazardous Air Pollutants (HAPs)	0.008	0.008	0.002	0.008	0.002

Highest single HAP	0.002	0.002	0.0006	0.002	0.0006

4. **Best Available Technology (BAT)** - For each pollutant for which the Requested Allowable in the above table exceeds 10 tons per year, BAT, as defined in OAC 3745-31-01, is required. Describe what has been selected as BAT and the basis for the selection:

   N/A

5. **Control Equipment** - Does this air contaminant source employ emissions control equipment?
   See Facility Profile

6. **Process Flow Diagram** - Attach a Process Flow Diagram to this application for this air contaminant source. See the application instructions for additional information.
   Process Flow Diagrams:

Description	Type	EAC Form Type	Public Document Id
Process Flow Diagram_Rev	Process flow diagram		628569

7. **Modeling information: (Note: items in bold in Tables 7-A and/or 7-B, as applicable, are required even if the tables do not otherwise need to be completed. If applicable, all information is required** An air quality modeling analysis is required for PTIs and PTIOs for new installations or modifications, as defined in OAC rule 3745-31-01, where either the increase of toxic air contaminants from any air contaminant source or the increase of any other pollutant for all air contaminant sources combined exceed a threshold listed below. This analysis is to assure that the impact from the requested project will not exceed Ohios Acceptable Incremental Impacts for criteria pollutants and/or Maximum Allowable Ground Level Concentrations (MAGLC) for toxic air contaminants. (See Ohio EPA, DAPCs Engineering Guide #69 for more information.) Permit requests that would have unacceptable impacts cannot be approved as proposed. See the line-by-line PTI/PTIO instructions for additional information.
   See Facility Profile

8. **Request for Federally Enforceable Limits** - As part of this permit application, do you wish to propose voluntary restrictions to limit emissions in order to avoid specific requirements listed below, (i.e., are you requesting federally enforceable limits to obtain synthetic minor status)?
   Yes
   If yes, why are you requesting federally enforceable limits?
   - Avoid another requirement

   Describe:

   Restricted to 500 hrs/year of operation to comply with Ohio EPA requirements for emergency operation

9. **Continuous Emissions Monitoring** Does this air contaminant source utilize any continuous emissions monitoring (CEM) equipment for indicating or demonstrating compliance? This does not include continuous parametric monitoring systems.
   See Facility Profile

10. **EAC Forms** The appropriate Emissions Activity Category (EAC) form(s) must be completed and attached for each air contaminant source. At least one complete EAC form must be submitted for each air contaminant source for the application to be considered complete. Refer to the list attached to the application instructions. Please indicate which EAC form corresponds to this air contaminant source.
    Process Flow Diagrams:

Description	Type	EAC Form Type	Public Document Id
Emergency Generator EAC	EAC	3862 Stationary Internal Combustion Engine (2003)	628324

Section II - Specific Air Contaminant Source Information

Facility ID: 0448020102
Emissions Unit ID: TMP173335
Company Equipment ID: Emergency Fire Pump

One copy of this section should be filled out for each air contaminant source (emissions unit) covered by this PTI/PTIO application identified in Section I, Question 5. See the application instructions for additional information.

1. **Air Contaminant Source Installation or Modification Schedule** Check all that apply (must be completed regardless of date of installation or modification):

New installation (for which construction has not yet begun, in accordance with OAC rule 3745-31-33). When will you begin to install the air contaminant source?
after installation permit has been issued

2. **SCC Codes** - List all Source Classification Code(s) (SCC) that describe the process(es) performed by this air contaminant source (e.g., 1-02-002-04).

See Facility Profile

3. **Emissions Information** - The following table requests information needed to determine the applicable requirements and the compliance status of this air contaminant source with those requirements. Suggestions for how to estimate emissions may be found in the instructions to the Emissions Activity Category (EAC) forms required with this application. If you need further assistance, contact your District Office/Local Air Agency representative.

- If total potential emissions of HAPs or any Toxic Air Contaminant (as identified in OAC rule 3745-114-01) are greater than 1 ton/yr, fill in the table for that (those) pollutant(s). For all other pollutants, if Emissions before controls (max), lb/hr multiplied by 24 hours/day is greater than 10 lbs/day, fill in the table for that pollutant.
- Actual emissions are calculated including add-on control equipment. If you have no add-on control equipment, Emissions before controls will be the same as Actual emissions.
- Actual emissions and Requested Allowable should be based on operating 8760 hr/yr unless you are requesting federally enforceable operating restrictions to limit emissions. If so, calculate emissions based on requested operating restrictions and describe in your calculations.
- If you use units other than lbs/hr or ton/yr, specify the units used (e.g., gr/dscf, lb/ton charged, lb/MMBtu, tons/12-months).
- Requested Allowable (ton/yr) is often equivalent to Potential to Emit (PTE) as defined in OAC rule 3745-31-01 and OAC rule 3745-77-01.

Pollutant	Emissions before controls (max)* (lb/hr)	Actual emissions (lb/hr)	Actual emissions (ton/year)	Requested Allowable (lb/hr)	Requested Allowable (ton/year)
Particulate emissions (PE/PM) (formerly particulate matter, PM)	0.07	0.07	0.02	0.07	0.02
PM # 10 microns in diameter (PE/PM10)	0.08	0.08	0.02	0.08	0.02
PM # 2.5 microns in diameter (PE/PM2.5)	0.08	0.08	0.02	0.08	0.02
Sulfur dioxide (SO2)	0.00	0.00	0.00	0.00	0.00
Nitrogen oxides (NOx)	1.44	1.44	0.36	1.44	0.36
Carbon monoxide (CO)	1.44	1.44	0.36	1.44	0.36
Organic compounds (OC)	0.2	0.2	0.05	0.2	0.05
Volatile organic compounds (VOC)	0.2	0.2	0.05	0.2	0.05
Lead (Pb)	2.45E-05	2.45E-05	6.13E-06	2.45E-05	6.13E-06
Total Hazardous Air Pollutants (HAPs)	0.008	0.008	0.002	0.008	0.002

Highest single HAP	0.002	0.002	0.0006	0.002	0.0006

4. **Best Available Technology (BAT)** - For each pollutant for which the Requested Allowable in the above table exceeds 10 tons per year, BAT, as defined in OAC 3745-31-01, is required. Describe what has been selected as BAT and the basis for the selection:

   N/A

5. **Control Equipment** - Does this air contaminant source employ emissions control equipment?
   See Facility Profile

6. **Process Flow Diagram** - Attach a Process Flow Diagram to this application for this air contaminant source. See the application instructions for additional information.
   Process Flow Diagrams:

Description	Type	EAC Form Type	Public Document Id
Process Flow Diagram_Rev	Process flow diagram		628569

7. **Modeling information: (Note: items in bold in Tables 7-A and/or 7-B, as applicable, are required even if the tables do not otherwise need to be completed. If applicable, all information is required** An air quality modeling analysis is required for PTIs and PTIOs for new installations or modifications, as defined in OAC rule 3745-31-01, where either the increase of toxic air contaminants from any air contaminant source or the increase of any other pollutant for all air contaminant sources combined exceed a threshold listed below. This analysis is to assure that the impact from the requested project will not exceed Ohios Acceptable Incremental Impacts for criteria pollutants and/or Maximum Allowable Ground Level Concentrations (MAGLC) for toxic air contaminants. (See Ohio EPA, DAPCs Engineering Guide #69 for more information.) Permit requests that would have unacceptable impacts cannot be approved as proposed. See the line-by-line PTI/PTIO instructions for additional information.
   See Facility Profile

8. **Request for Federally Enforceable Limits** - As part of this permit application, do you wish to propose voluntary restrictions to limit emissions in order to avoid specific requirements listed below, (i.e., are you requesting federally enforceable limits to obtain synthetic minor status)?
   Yes
   If yes, why are you requesting federally enforceable limits?
   - Avoid another requirement

   Describe:

   500 hour/year operational restriction to satisfy Ohio EPA requirement for emergency operation

9. **Continuous Emissions Monitoring** Does this air contaminant source utilize any continuous emissions monitoring (CEM) equipment for indicating or demonstrating compliance? This does not include continuous parametric monitoring systems.
   See Facility Profile

10. **EAC Forms** The appropriate Emissions Activity Category (EAC) form(s) must be completed and attached for each air contaminant source. At least one complete EAC form must be submitted for each air contaminant source for the application to be considered complete. Refer to the list attached to the application instructions. Please indicate which EAC form corresponds to this air contaminant source.
    Process Flow Diagrams:

Description	Type	EAC Form Type	Public Document Id
Emergency Fire Pump EAC	EAC	3862 Stationary Internal Combustion Engine (2003)	628325

Section II - Specific Air Contaminant Source Information

Facility ID: 0448020102
Emissions Unit ID: TMP173336
Company Equipment ID: Wet Cooling Tower

One copy of this section should be filled out for each air contaminant source (emissions unit) covered by this PTI/PTIO application identified in Section I, Question 5. See the application instructions for additional information.

1. **Air Contaminant Source Installation or Modification Schedule** Check all that apply (must be completed regardless of date of installation or modification):

New installation (for which construction has not yet begun, in accordance with OAC rule 3745-31-33). When will you begin to install the air contaminant source?
after installation permit has been issued

2. **SCC Codes** - List all Source Classification Code(s) (SCC) that describe the process(es) performed by this air contaminant source (e.g., 1-02-002-04).

See Facility Profile

3. **Emissions Information** - The following table requests information needed to determine the applicable requirements and the compliance status of this air contaminant source with those requirements. Suggestions for how to estimate emissions may be found in the instructions to the Emissions Activity Category (EAC) forms required with this application. If you need further assistance, contact your District Office/Local Air Agency representative.

- If total potential emissions of HAPs or any Toxic Air Contaminant (as identified in OAC rule 3745-114-01) are greater than 1 ton/yr, fill in the table for that (those) pollutant(s). For all other pollutants, if Emissions before controls (max), lb/hr multiplied by 24 hours/day is greater than 10 lbs/day, fill in the table for that pollutant.
- Actual emissions are calculated including add-on control equipment. If you have no add-on control equipment, Emissions before controls will be the same as Actual emissions.
- Actual emissions and Requested Allowable should be based on operating 8760 hr/yr unless you are requesting federally enforceable operating restrictions to limit emissions. If so, calculate emissions based on requested operating restrictions and describe in your calculations.
- If you use units other than lbs/hr or ton/yr, specify the units used (e.g., gr/dscf, lb/ton charged, lb/MMBtu, tons/12-months).
- Requested Allowable (ton/yr) is often equivalent to Potential to Emit (PTE) as defined in OAC rule 3745-31-01 and OAC rule 3745-77-01.

Pollutant	Emissions before controls (max)* (lb/hr)	Actual emissions (lb/hr)	Actual emissions (ton/year)	Requested Allowable (lb/hr)	Requested Allowable (ton/year)
Particulate emissions (PE/PM) (formerly particulate matter, PM)	1.00	1.00	4.39	1.00	4.39
PM # 10 microns in diameter (PE/PM10)	1.00	1.00	4.39	1.00	4.39
PM # 2.5 microns in diameter (PE/PM2.5)	1.00	1.00	4.39	1.00	4.39
Sulfur dioxide (SO2)	0	0	0	0	0
Nitrogen oxides (NOx)	0	0	0	0	0
Carbon monoxide (CO)	0	0	0	0	0
Organic compounds (OC)	0	0	0	0	0
Volatile organic compounds (VOC)	0	0	0	0	0
Lead (Pb)	0	0	0	0	0
Total Hazardous Air Pollutants (HAPs)	0	0	0	0	0

Highest single HAP	0	0	0	0	0

4. **Best Available Technology (BAT)** - For each pollutant for which the Requested Allowable in the above table exceeds 10 tons per year, BAT, as defined in OAC 3745-31-01, is required. Describe what has been selected as BAT and the basis for the selection:

   Drift Eliminators

5. **Control Equipment** - Does this air contaminant source employ emissions control equipment?
   See Facility Profile
6. **Process Flow Diagram** - Attach a Process Flow Diagram to this application for this air contaminant source. See the application instructions for additional information.
   Process Flow Diagrams:

Description	Type	EAC Form Type	Public Document Id
Process Flow Diagram_Rev	Process flow diagram		628569

7. **Modeling information: (Note: items in bold in Tables 7-A and/or 7-B, as applicable, are required even if the tables do not otherwise need to be completed. If applicable, all information is required** An air quality modeling analysis is required for PTIs and PTIOs for new installations or modifications, as defined in OAC rule 3745-31-01, where either the increase of toxic air contaminants from any air contaminant source or the increase of any other pollutant for all air contaminant sources combined exceed a threshold listed below. This analysis is to assure that the impact from the requested project will not exceed Ohios Acceptable Incremental Impacts for criteria pollutants and/or Maximum Allowable Ground Level Concentrations (MAGLC) for toxic air contaminants. (See Ohio EPA, DAPCs Engineering Guide #69 for more information.) Permit requests that would have unacceptable impacts cannot be approved as proposed. See the line-by-line PTI/PTIO instructions for additional information.
   See Facility Profile
8. **Request for Federally Enforceable Limits** - As part of this permit application, do you wish to propose voluntary restrictions to limit emissions in order to avoid specific requirements listed below, (i.e., are you requesting federally enforceable limits to obtain synthetic minor status)?
   No
9. **Continuous Emissions Monitoring** Does this air contaminant source utilize any continuous emissions monitoring (CEM) equipment for indicating or demonstrating compliance? This does not include continuous parametric monitoring systems.
   See Facility Profile
10. **EAC Forms** The appropriate Emissions Activity Category (EAC) form(s) must be completed and attached for each air contaminant source. At least one complete EAC form must be submitted for each air contaminant source for the application to be considered complete. Refer to the list attached to the application instructions. Please indicate which EAC form corresponds to this air contaminant source.
    Process Flow Diagrams:

Description	Type	EAC Form Type	Public Document Id
Cooling Tower Process Operation	EAC	3100 Process operation (2003)	627128

Facility Profile Report
Facility Name: Oregon Clean Energy Center
ID: 0448020102

Facility : 0448020102

Aug 23 2012, 15:04:46

- Facility Information

Facility ID: 0448020102

FacilityName: Oregon Clean Energy Center

Facility Description: 800 MW combined cycle gas turbine (CCGT) facility

Address1: 816 Lallendorf Rd

Address2:

City: Oregon

State: Ohio

Zip Code: 43616

Portable:

Operating Status: Not Installed

Permitting Classification: NONE

PER Due Date: None

Transitional Status: None

Title V Permit Status: None

Title V Certification Report Due Date:

Anticipated Emissions Reporting Category for 2012: NONE

Core Place ID: 313477

Latitude: 41.667587

Longtitude: -83.44293

- Yearly Emissions Reporting Category

Year	Category	Enabled	Status

- SIC Codes

- NAICS Codes

221112 Fossil Fuel Electric Power Generation

- Contacts

Contact Type	Contact Person	Phone Number	Email	Start Date	End Date

- Federal Rules Applicability

Subject to MACT:

Subject to PSD:

Subject to NESHAPS:

Subject to non-attainment NSR:

Subject to NSPS:

Subject to 112(r):

Subject to Title IV:

Emission Unit : TMP173331

Aug 23 2012, 15:04:46

- Emission Unit Information

DAPC Emissions Unit ID: TMP173331

DAPC Description:

Company Equipment ID: CTG #1

Company Description: One combustion turbine generator exhausting through a dedicated Heat Recovery Steam Generator (HRSG). The HRSG will generate steam from the waste heat energy in the exhaust gas. Each HRSG will be equipped with supplemental fuel firing via a duct burner. The duct burner provides additional energy to the HRSG, which produces more steam that can be fed to the steam turbine generator (STG). Steam generated in the HRSG will be expanded through a STG multi-stage, reheat, condensing turbine and associated electric generator to generate additional electricity

Operating Status: Not Installed

Completion of Initial Installation Date: 04/30/2016

Begin Installation/Modification Date: 10/01/2013

Commence Operation After Installation or Latest Modification Date:

Title V EU Classification: Non-insignificant

Exemption Status: NA

Boiler/Turbine/Generator Design Capacity: Turbine

ORIS Boiler ID:

- Processes

Emission Unit : TMP173332

Aug 23 2012, 15:04:46

- Emission Unit Information

DAPC Emissions Unit ID: TMP173332

DAPC Description:

Company Equipment ID: CTG #2

Company Description: One combustion turbine generator exhausting through a dedicated Heat Recovery Steam Generator (HRSG). The HRSG will generate steam from the waste heat energy in the exhaust gas. Each HRSG will be equipped with supplemental fuel firing via a duct burner. The duct burner provides additional energy to the HRSG, which produces more steam that can be fed to the steam turbine generator (STG). Steam generated in the HRSG will be expanded through a STG multi-stage, reheat, condensing turbine and associated electric generator to generate additional electricity

Operating Status: Not Installed

Completion of Initial Installation Date: 04/30/2016

Begin Installation/Modification Date: 10/01/2013

Commence Operation After Installation or Latest Modification Date:

Title V EU Classification: Non-insignificant

Exemption Status: NA

Boiler/Turbine/Generator Design Capacity: Turbine

ORIS Boiler ID:

- Processes

Emission Unit : TMP173333

Aug 23 2012, 15:04:46

- Emission Unit Information

DAPC Emissions Unit ID: TMP173333

DAPC Description:

Company Equipment ID: Auxiliary Boiler

Company Description: 90 MMBtu/hr auxiliary boiler operated as needed to keep the HRSG warm during periods of turbine shutdown and provide sealing steam to the steam turbine during warm and hot starts.

Operating Status: Not Installed

Completion of Initial Installation Date: 04/30/2016

Begin Installation/Modification Date: 10/01/2013

Commence Operation After Installation or Latest Modification Date:

Title V EU Classification: Non-insignificant

Exemption Status: NA

Boiler/Turbine/Generator Design Capacity: Boiler/Heater

ORIS Boiler ID:

- Processes

Emission Unit : TMP173334

Aug 23 2012, 15:04:46

- Emission Unit Information

DAPC Emissions Unit ID: TMP173334

DAPC Description:

Company Equipment ID: Emergency Generator

Company Description: 1,500 kW emergency diesel-fired generator to provide on-site emergency power capabiities independent of the utility grid

Operating Status: Not Installed

Completion of Initial Installation Date: 04/30/2016

Begin Installation/Modification Date: 10/01/2013

Commence Operation After Installation or Latest Modification Date:

Title V EU Classification: Insignificant

Exemption Status: NA

Boiler/Turbine/Generator Design Capacity: Not Applicable

Design Capacity Units:

ORIS Boiler ID:

- Processes

Emission Unit : TMP173335

Aug 23 2012, 15:04:46

- Emission Unit Information

DAPC Emissions Unit ID: TMP173335

DAPC Description:

Company Equipment ID: Emergency Fire Pump

Company Description: 250 hp emergency diesel-fired firepump to provide on-site fire fighting capabilities independent of the utility grid

Operating Status: Not Installed

Completion of Initial Installation Date: 04/30/2016

Begin Installation/Modification Date: 10/01/2013

Commence Operation After Installation or Latest Modification Date:

Title V EU Classification: Insignificant

Exemption Status: NA

Boiler/Turbine/Generator Design Capacity: Not Applicable

Design Capacity Units:

ORIS Boiler ID:

- Processes

Emission Unit : TMP173336

Aug 23 2012, 15:04:46

- Emission Unit Information

DAPC Emissions Unit ID: TMP173336

DAPC Description:

Company Equipment ID: Wet Cooling Tower

Company Description: 12- Cell Wet Cooling Tower equipped with a high efficiency drift eliminator

Operating Status: Not Installed

Completion of Initial Installation Date: 04/30/2016

Begin Installation/Modification Date: 10/01/2013

Commence Operation After Installation or Latest Modification Date:

Title V EU Classification: Non-insignificant

Exemption Status: NA

Boiler/Turbine/Generator Design Capacity: Not Applicable

Design Capacity Units:

ORIS Boiler ID:

- Processes

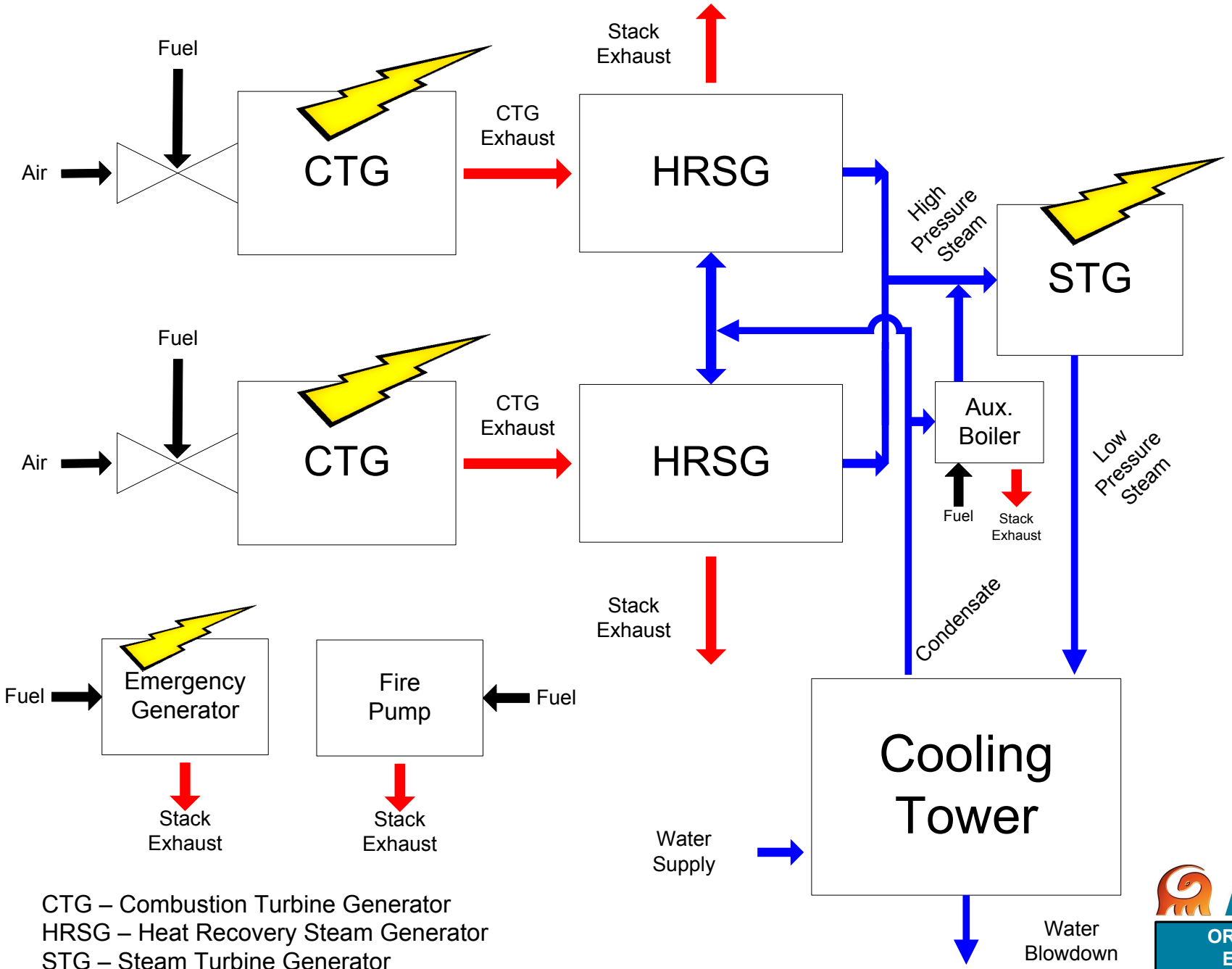

CTG – Combustion Turbine Generator
HRSG – Heat Recovery Steam Generator
STG – Steam Turbine Generator

ARCADIS

OREGON CLEAN ENERGY, LLC

PROCESS FLOW DIAGRAM

Lucas County, Ohio | Date: 08/17/2012

City: Chicago Author: MNesta Path: G:\Aproject\GIS\OCE\MXD\OCE_ProcessFlow.mxd

FOR OHIO EPA USE
FACILITY ID: _____

EU ID: _____ PTI #:_____

EMISSIONS ACTIVITY CATEGORY FORM
FUEL BURNING OPERATION

This form is to be completed for each fuel burning operation. State/Federal regulations which may apply to fuel burning operations are listed in the instructions. Note that there may be other regulations which apply to this emissions unit which are not included in this list

1. Reason this form is being submitted (check one)

   ☒ New Permit ☐ Renewal or Modification of Air Permit Number(s) (e.g. B001)_____

2. Maximum Operating Schedule: __24_____hours per day; _365___days per year

   If the schedule is less than 24 hours/day or 365 days/year, what limits the schedule to less than maximum? See instructions for examples. _____

3. Input Capacity (million Btu/hr):

Rated *(Indicate units if other than mmBtu/hr)*	Maximum *(Indicate units if other than mmBtu/hr)*	Normal *(Indicate units if other than mmBtu/hr)*
90	90	90

4. Output Capacity:

Rated *(lb steam/hr)*	Maximum *(lb steam/hr)*	Normal *(lb steam/hr)*

   ☐ Not applicable - operation does not produce steam.

5. Percent of Operating Time Used for:

   Process: ____100___%
   Space Heat: _____%

6. Type of Draft (check one):

   ☐ Natural ☐ Induced ☒ Forced

7. Type of combustion monitoring (check one):

   ☒ Fuel/Air Ratio ☐ Oxygen ☐ None
   ☐ Other (describe) _____

8. Type of Fuel Fired (complete all that apply):

Fuel*	Fired as...	Min. Heat Content (Btu/unit)	Max. % Ash	Max. % Sulfur	Max. Annual Fuel Use	Average Hourly Fuel Use	Maximum Hourly Fuel Use
Coal	☐ Primary ☐ Backup				tons	lbs	lbs
No. 2 Fuel Oil	☐ Primary ☐ Backup				gal	gal	gal
No. 6 Fuel Oil	☐ Primary ☐ Backup				gal	gal	gal
Other** Oil	☐ Primary ☐ Backup				gal	gal	gal
Natural Gas	☒ Primary ☐ Backup	1050 Btu/scf			751 MM ft^3	0.09 MM ft^3	0.09 MM ft^3
Wood	☐ Primary ☐ Backup				tons	lbs	lbs
LPG	☐ Primary ☐ Backup				gal	gal	gal
Other**	☐ Primary ☐ Backup						
Other**	☐ Primary ☐ Backup						

* Please identify all combinations of fuels that are co-fired: _____

** Identify other fuel(s): _____

Coal-Fired Units

9. Type of Coal Firing (check one):

☐ Pulverized-Wet Bottom ☐ Hand-Fired ☐ Chain Grate ☐ Traveling Grate
☐ Pulverized-Dry Bottom ☐ Cyclones ☐ Spreader Stoker ☐ Fluidized Bed
☐ Underfeed Stoker ☐ Other (describe) _____

10. Flyash Reinjection:

☐ Yes ☐ No

11. Overfire Air:

☐ Yes ☐ No

Oil-Fired Units

12. Oil Preheater:

☐ Yes - Indicate Temperature_____deg. F
☐ No

FOR OHIO EPA USE
FACILITY ID:_____

EU ID: _____ PTI #:

EMISSIONS ACTIVITY CATEGORY FORM
GENERAL PROCESS OPERATION

This form is to be completed for each process operation when there is no specific emissions activity category (EAC) form applicable. If there is more than one end product for this process, copy and complete this form for each additional product (see instructions). Several State/Federal regulations which may apply to process operations are listed in the instructions. Note that there may be other regulations which apply to this emissions unit which are not included in this list.

1. Reason this form is being submitted (Check one)

   ☒ New Permit ☐ Renewal or Modification of Air Permit Number(s) (e.g.P001)_____

2. Maximum Operating Schedule: **24** hours per day ; **365** days per year

   If the schedule is less than 24 hours/day or 365 days/year, what limits the schedule to less than maximum? See instructions for examples. _____

3. End product of this process: **Cooling water**

4. Hourly production rates (indicate appropriate units). Please see the instructions for clarification of "Maximum" and "Average" for new versus existing operations:

Minute	Rate	Units (e.g., widgets)
Average production	**133,700**	**Gallon**
Maximum production		

5. Annual production rates (indicate appropriate units) Please see the instructions for clarification of "Maximum" and "Actual" for new versus existing operations:

Annual	Rate	Units (e.g., widgets)
Actual production		
Maximum production		

6. Type of operation (please check one):

☒ Continuous
☐ Batch (please complete items below)

Minimum cycle* time (minutes): _____
Minimum time between cycles (minutes): _____
Maximum number of cycles per daily 24 hour period: _____
(Note: include cycle time and set up/clean up time.)

*"Cycle" refers to the time the equipment is in operation.

7. Materials used in process at maximum production rate (add rows/pages as needed):

Material	Physical State at Standard Conditions	Principle Use	Amount**
Water	**Liquid**	**Cooling**	**133,700 gpm**

** Please indicate the amount **and** rate (e.g., lbs/hr, gallons/hr, lbs/cycle, etc.).

8. Please provide a narrative description of the process below (e.g., coating of metal parts using high VOC content coatings for the manufacture of widgets; emissions controlled by thermal oxidizer...):

___See Section 2.3.4 of PTI Application Package_____

FOR OHIO EPA USE
FACILITY ID: _____
EU ID: _____ PTI#:_____

EMISSIONS ACTIVITY CATEGORY FORM
STATIONARY INTERNAL COMBUSTION ENGINE

This form is to be completed for each stationary reciprocating or gas turbine engine. State/Federal regulations which may apply to stationary internal combustion engines are listed in the instructions. Note that there may be other regulations which apply to this emissions unit which are not included in this list.

1. Reason this form is being submitted (Check one)

   ☒ New Permit ☐ Renewal or Modification of Air Permit Number (e.g. P001)_____

2. Maximum Operating Schedule: __8,760_____ hours per day; _365____ days per year

   If the schedule is less than 24 hours/day or 365 days/year, what limits the schedule to less than maximum? See instructions for examples. _____

3. Engine type: ☒ Gas turbine ☐ Reciprocating

4. Purpose of engine: ☐ Driving pump or compressor ☒ Driving electrical generator

5. Normal use of engine: ☐ Emergency only ☒ Non-emergency

6. Engine Manufacturer: ___TBD_____ Model No: ___TBD_____

7. Engine exhaust configuration: (for turbines only)
   ☐ simple cycle *(no heat recovery)*
   ☐ regenerative cycle *(heat recovery to preheat combustion air)*
   ☐ cogeneration cycle *(heat recovered to produce steam)*
   ☒ combined cycle *(heat recovered to produce steam which drives generator)*

8. Input capacities (million BTU/hr): Rated _____ Maximum __2,277_____ Normal _____

   Supplemental burner (duct burner) input capacity, if equipped (million BTU/hr):

   Rated:_____ Maximum ___841__ Normal _____

9. Output capacities (Horsepower): Rated: _____ Maximum _____ Normal _____

   (Kilowatts): Rated: _800,000_ Maximum _846,300_ Normal _____

   (lbs steam/hr)*: Rated: __75,000____ Maximum __75,000__ Normal _____

*required for cogeneration or combined cycle units only

10. Type of ignition: ☐ non-spark (diesel) ☐ spark

11. Type of fuel fired (check all that apply):

☒ single fuel
☐ dual fuel

☐ No. 2 oil, low-sulfur
☐ No. 2 oil, high-sulfur
☐ gasoline
☐ other, explain _____

☒ natural gas
☐ diesel

☐ landfill gas
☐ digester gas
☐ propane

12. Complete the following table for all fuels identified in question 11 that are used for the engine and any supplemental (duct) burners, if equipped:

Fuel	Heat Content (BTU/unit)	wt.% Ash	wt.% Sulfur	Fuel Usage		
				Estimated Maximum Per Year	Normal Per Hour	Max. Per Hour
Nat. gas	1,050 BTU/cu ft		0.005 gr/scf	25,283 MMcu ft	cu ft	2.9 MMcu ft
No. 2 oil	BTU/gal			gal	gal	gal
Gasoline	BTU/gal			gal	gal	gal
Diesel	BTU/gal			gal	gal	gal
Landfill/digester gas	BTU/cu ft		ppm	cu ft	cu ft	cu ft
Other (show units)						
List supplemental (duct) burner fuel and information below (show units):						

13. Type of combustion cycle (check all that apply):

☐ 2-stroke
☐ rich-burn
☐ carbureted
☐ other, explain _____

☐ 4-stroke
☐ lean-burn
☐ fuel injected

14. Emissions control techniques (check all that apply):

☐ prestratified charge
☒ catalytic oxidation (CO)
☐ air/fuel ratio
☐ 2-stage rich/lean combustion
☐ water/steam injection
☐ other, explain_____

☐ nonselective catalytic reduction (NSCR)
☒ selective catalytic reduction (SCR)
☐ injection timing retard (ITR)
☐ 2-stage lean/lean combustion
☐ preignition chamber combustion (PCC)

For each emissions control technique checked above, explain what pollutants are controlled by each technique:

Catalytic oxidation will control VOCs and CO. Selective Catalytic Reduction (SCR) will control NOx

FOR OHIO EPA USE
FACILITY ID: _____
EU ID: _____ PTI#:_____

EMISSIONS ACTIVITY CATEGORY FORM
STATIONARY INTERNAL COMBUSTION ENGINE

This form is to be completed for each stationary reciprocating or gas turbine engine. State/Federal regulations which may apply to stationary internal combustion engines are listed in the instructions. Note that there may be other regulations which apply to this emissions unit which are not included in this list.

1. Reason this form is being submitted (Check one)

   ☒ New Permit ☐ Renewal or Modification of Air Permit Number (e.g. P001)_____

2. Maximum Operating Schedule: __8,760_____ hours per day; _365____ days per year

   If the schedule is less than 24 hours/day or 365 days/year, what limits the schedule to less than maximum? See instructions for examples. _____

3. Engine type: ☒ Gas turbine ☐ Reciprocating

4. Purpose of engine: ☐ Driving pump or compressor ☒ Driving electrical generator

5. Normal use of engine: ☐ Emergency only ☒ Non-emergency

6. Engine Manufacturer: ___TBD_____ Model No: ___TBD_____

7. Engine exhaust configuration: (for turbines only)
   ☐ simple cycle *(no heat recovery)*
   ☐ regenerative cycle *(heat recovery to preheat combustion air)*
   ☐ cogeneration cycle *(heat recovered to produce steam)*
   ☒ combined cycle *(heat recovered to produce steam which drives generator)*

8. Input capacities (million BTU/hr): Rated _____ Maximum __2,277_____ Normal _____

   Supplemental burner (duct burner) input capacity, if equipped (million BTU/hr):

   Rated:_____ Maximum ___841__ Normal _____

9. Output capacities (Horsepower): Rated: _____ Maximum _____ Normal _____

   (Kilowatts): Rated: _800,000_ Maximum _846,300_ Normal _____

   (lbs steam/hr)*: Rated: __75,000__ Maximum __75,000____ Normal _____

*required for cogeneration or combined cycle units only

10. Type of ignition: ☐ non-spark (diesel) ☐ spark

11. Type of fuel fired (check all that apply):

☒ single fuel
☐ dual fuel

☐ No. 2 oil, low-sulfur
☐ No. 2 oil, high-sulfur
☐ gasoline
☐ other, explain _____

☒ natural gas
☐ diesel

☐ landfill gas
☐ digester gas
☐ propane

12. Complete the following table for all fuels identified in question 11 that are used for the engine and any supplemental (duct) burners, if equipped:

Fuel	Heat Content (BTU/unit)	wt.% Ash	wt.% Sulfur	Fuel Usage		
				Estimated Maximum Per Year	Normal Per Hour	Max. Per Hour
Nat. gas	1,050 BTU/cu ft		0.005 gr/scf	25,283 MMcu ft	cu ft	2.9 MMcu ft
No. 2 oil	BTU/gal			gal	gal	gal
Gasoline	BTU/gal			gal	gal	gal
Diesel	BTU/gal			gal	gal	gal
Landfill/digester gas	BTU/cu ft		ppm	cu ft	cu ft	cu ft
Other (show units)						
List supplemental (duct) burner fuel and information below (show units):						

13. Type of combustion cycle (check all that apply):

☐ 2-stroke
☐ rich-burn
☐ carbureted
☐ other, explain _____

☐ 4-stroke
☐ lean-burn
☐ fuel injected

14. Emissions control techniques (check all that apply):

☐ prestratified charge
☒ catalytic oxidation (CO)
☐ air/fuel ratio
☐ 2-stage rich/lean combustion
☐ water/steam injection
☐ other, explain_____

☐ nonselective catalytic reduction (NSCR)
☒ selective catalytic reduction (SCR)
☐ injection timing retard (ITR)
☐ 2-stage lean/lean combustion
☐ preignition chamber combustion (PCC)

For each emissions control technique checked above, explain what pollutants are controlled by each technique:

Catalytic oxidation will control VOCs and CO. Selective Catalytic Reduction (SCR) will control NOx

FOR OHIO EPA USE
FACILITY ID: _____
EU ID: _____ PTI#:_____

EMISSIONS ACTIVITY CATEGORY FORM
STATIONARY INTERNAL COMBUSTION ENGINE

This form is to be completed for each stationary reciprocating or gas turbine engine. State/Federal regulations which may apply to stationary internal combustion engines are listed in the instructions. Note that there may be other regulations which apply to this emissions unit which are not included in this list.

1. Reason this form is being submitted (Check one)

   ☒ New Permit ☐ Renewal or Modification of Air Permit Number (e.g. P001)_____

2. Maximum Operating Schedule: __24____ hours per day; _varies____ days per year

   If the schedule is less than 24 hours/day or 365 days/year, what limits the schedule to less than maximum? See instructions for examples.

   _Limited to 500 hours/year for emergency operations _____

3. Engine type: ☐ Gas turbine ☒ Reciprocating

4. Purpose of engine: ☐ Driving pump or compressor ☒ Driving electrical generator

5. Normal use of engine: ☒ Emergency only ☐ Non-emergency

6. Engine Manufacturer: ___TBD_____ Model No: ___TBD_____

7. Engine exhaust configuration: (for turbines only)
   ☐ simple cycle *(no heat recovery)*
   ☐ regenerative cycle *(heat recovery to preheat combustion air)*
   ☐ cogeneration cycle *(heat recovered to produce steam)*
   ☐ combined cycle *(heat recovered to produce steam which drives generator)*

8. Input capacities (million BTU/hr): Rated ___14.1_____ Maximum __14.1_____ Normal _14.1_____

   Supplemental burner (duct burner) input capacity, if equipped (million BTU/hr):

   Rated:_____ Maximum _____ Normal _____

9. Output capacities (Horsepower): Rated: _____ Maximum _____ Normal _____

   (Kilowatts): Rated: 1,500_ Maximum _1,500_ Normal __1,500_____

(lbs steam/hr)*: Rated: _____ Maximum _____ Normal _____

*required for cogeneration or combined cycle units only

10. Type of ignition: ☒ non-spark (diesel) ☐ spark

11. Type of fuel fired (check all that apply):

☒ single fuel
☐ dual fuel

☐ No. 2 oil, low-sulfur
☐ No. 2 oil, high-sulfur
☐ gasoline
☐ other, explain _____

☐ natural gas
☒ diesel

☐ landfill gas
☐ digester gas
☐ propane

12. Complete the following table for all fuels identified in question 11 that are used for the engine and any supplemental (duct) burners, if equipped:

Fuel	Heat Content (BTU/unit)	wt.% Ash	wt.% Sulfur	Fuel Usage		
				Estimated Maximum Per Year	Normal Per Hour	Max. Per Hour
Nat. gas	BTU/cu ft		gr/scf	MMcu ft	cu ft	MMcu ft
No. 2 oil	BTU/gal			gal	gal	gal
Gasoline	BTU/gal			gal	gal	gal
Diesel	137,000 BTU/gal		0.0015	50,500gal	101gal	101gal
Landfill/digester gas	BTU/cu ft		ppm	cu ft	cu ft	cu ft
Other (show units)						
List supplemental (duct) burner fuel and information below (show units):						

13. Type of combustion cycle (check all that apply):

☐ 2-stroke
☐ rich-burn
☐ carbureted
☐ other, explain _____

☐ 4-stroke
☐ lean-burn
☐ fuel injected

14. Emissions control techniques (check all that apply):

☐ prestratified charge
☐ catalytic oxidation (CO)
☐ air/fuel ratio
☐ 2-stage rich/lean combustion
☐ water/steam injection
☒ other, explain__Use of low sulfur fuel_____

☐ nonselective catalytic reduction (NSCR)
☐ selective catalytic reduction (SCR)
☐ injection timing retard (ITR)
☐ 2-stage lean/lean combustion
☐ preignition chamber combustion (PCC)

For each emissions control technique checked above, explain what pollutants are controlled by each technique:

The use of ultra low sulfur fuel will minimize SO2 emissions

FOR OHIO EPA USE
FACILITY ID: _____
EU ID: _____ PTI#:_____

EMISSIONS ACTIVITY CATEGORY FORM
STATIONARY INTERNAL COMBUSTION ENGINE

This form is to be completed for each stationary reciprocating or gas turbine engine. State/Federal regulations which may apply to stationary internal combustion engines are listed in the instructions. Note that there may be other regulations which apply to this emissions unit which are not included in this list.

1. Reason this form is being submitted (Check one)

   ☒ New Permit ☐ Renewal or Modification of Air Permit Number (e.g. P001)_____

2. Maximum Operating Schedule: __24____ hours per day; _varies____ days per year

   If the schedule is less than 24 hours/day or 365 days/year, what limits the schedule to less than maximum? See instructions for examples.

   _Limited to 500 hours/year for emergency operations _____

3. Engine type: ☐ Gas turbine ☒ Reciprocating

4. Purpose of engine: ☒ Driving pump or compressor ☐ Driving electrical generator

5. Normal use of engine: ☒ Emergency only ☐ Non-emergency

6. Engine Manufacturer: ___TBD_____ Model No: ___TBD_____

7. Engine exhaust configuration: (for turbines only)
   ☐ simple cycle *(no heat recovery)*
   ☐ regenerative cycle *(heat recovery to preheat combustion air)*
   ☐ cogeneration cycle *(heat recovered to produce steam)*
   ☐ combined cycle *(heat recovered to produce steam which drives generator)*

8. Input capacities (million BTU/hr): Rated ___1.3_____ Maximum __1.3_____ Normal _1.3_____

   Supplemental burner (duct burner) input capacity, if equipped (million BTU/hr):

   Rated:_____ Maximum _____ Normal _____

9. Output capacities (Horsepower): Rated: _250___ Maximum __250____ Normal _250_____

   (Kilowatts): Rated: _ Maximum __ Normal _____

(lbs steam/hr)*: Rated: _____ Maximum _____ Normal _____

*required for cogeneration or combined cycle units only

10. Type of ignition: ☒ non-spark (diesel) ☐ spark

11. Type of fuel fired (check all that apply):

☒ single fuel
☐ dual fuel

☐ No. 2 oil, low-sulfur
☐ No. 2 oil, high-sulfur
☐ gasoline
☐ other, explain _____

☐ natural gas
☒ diesel

☐ landfill gas
☐ digester gas
☐ propane

12. Complete the following table for all fuels identified in question 11 that are used for the engine and any supplemental (duct) burners, if equipped:

Fuel	Heat Content (BTU/unit)	wt.% Ash	wt.% Sulfur	Fuel Usage		
				Estimated Maximum Per Year	Normal Per Hour	Max. Per Hour
Nat. gas	BTU/cu ft		gr/scf	MMcu ft	cu ft	MMcu ft
No. 2 oil	BTU/gal			gal	gal	gal
Gasoline	BTU/gal			gal	gal	gal
Diesel	137,000 BTU/gal		0.0015	4,650gal	9.3gal	9.3gal
Landfill/digester gas	BTU/cu ft		ppm	cu ft	cu ft	cu ft
Other (show units)						
List supplemental (duct) burner fuel and information below (show units):						

13. Type of combustion cycle (check all that apply):

☐ 2-stroke
☐ rich-burn
☐ carbureted
☐ other, explain _____

☐ 4-stroke
☐ lean-burn
☐ fuel injected

14. Emissions control techniques (check all that apply):

☐ prestratified charge
☐ catalytic oxidation (CO)
☐ air/fuel ratio
☐ 2-stage rich/lean combustion
☐ water/steam injection
☒ other, explain__Use of low sulfur fuel_____

☐ nonselective catalytic reduction (NSCR)
☐ selective catalytic reduction (SCR)
☐ injection timing retard (ITR)
☐ 2-stage lean/lean combustion
☐ preignition chamber combustion (PCC)

For each emissions control technique checked above, explain what pollutants are controlled by each

technique:

The use of ultra low sulfur fuel will minimize SO2 emissions

Appendix B: Supporting Calculations

Summary of Annual Emissions
Oregon Clean Energy

8/23/2012

Max Annual Emissions - facility wide (including startup and shutdown)

number of CTs	*2*	NOx	CO	VOC	SO2	PM10/PM2.5	NH3	H2SO4	Pb	CO2
combustion turbines	tpy	201.5	160.3	118.5	40.3	166.4	184.0	21.6	0	3,240,850
ancillary equipment	tpy	8.9	17.8	2.3	0.282	2.2	0.0000	2.13E-02	5.54E-05	47,029
cooling tower	tpy	0.0	0.0	0.0	0.0	4.4	0	0	0	0
TOTAL	**TPY**	**210.4**	**178.2**	**120.7**	**40.6**	**172.99**	**184.0**	**21.6**	**0.0**	**3287878.9**

Max Annual Emissions - per unit (including startup and shutdown)

steady state emissions[[no DB] / [DB]]		lb/hr	17	23	10	14	3	13	3.4	4.6	11.0	19.0
Potential Annual Hours			**NOx**		**CO**		**VOC**		**SO2**		**PM10/PM2.5**	
			tons	**hours**	**tpy**	**hours**	**tpy**	**hours**	**tpy**	**hours**	**tpy**	**hours**
0.0	steady state - no DB		0.0	0.0	0.0	0.0	0.0	0.0	0.0	0.0	0.0	0.0
8760.0	steady state - with DB		100.7	8760.0	51.9	7416.7	48.2	7416.7	20.1	8760.0	83.2	8760.0
3348.3	cold start		0.0	0.0	0.0	0.0	0.0	0.0	0.0	0.0	0.0	0.0
833.3	hot start		0.0	0.0	16.3	833.3	6.4	833.3	0.0	0.0	0.0	0.0
0.0	warm start		0.0	0.0	0.0	0.0	0.0	0.0	0.0	0.0	0.0	0.0
510.0	shutdown		0.0	0.0	12.0	510.0	4.7	510.0	0.0	0.0	0.0	0.0
	TOTAL	**TPY**	**100.7**	**8760.0**	**80.2**	**8760.0**	**59.2**	**8760.0**	**20.1**	**8760.0**	**83.2**	**8760.0**

steady state emissions are assumed for events that are self correcting

SUMMARY OF SU/SD INFORMATION

Self Correcting?

			NOx	CO	VOC	SO2	PM10/PM2.5
	cold start emissions		yes	yes	yes	yes	yes
	hot start emissions		yes	**no**	**no**	yes	yes
	warm start emissions		yes	yes	yes	yes	yes
	shutdown emissions		yes	**no**	**no**	yes	yes

red value indicates not self-correcting

Summary of Annual Emissions
Oregon Clean Energy

8/23/2012

Overall Assumptions

number of CTs	2	
duct burning hours	8760	hrs/yr
steady state hours per unit	8760	

Steady State Emissions Data

Emissions data from Siemens Dated 8-10-12
Emissions at ISO conditions (100% load 59 F) with and without DB
Emissions Case 7 (no DB) and Case 5 (w/DB)
NOx emissions assume SCR
CO and VOC assume oxidation catalyst
SO2 emissions assume no conversion to SO3 and 0.5 grains/100 SCF
H2SO4 emissions assume 35% conversion to SO3 and no conversion to ammonium sulfate

Each Turbine

		NOx	CO	VOC	SO2	PM10/PM2.5	NH3	H2SO4	CO2
Emissions - (Case 7) - No DB	lb/hr	17	10	3	3.40	11.0	16	1.822	273289
Emissions - (Case 5) - w/DB	lb/hr	23	14	13	4.60	19.0	21	2.465	369960
Emissions from DB	lb/hr	6	4	10	1.2	8	5	0.643125	96671
Facility operating hours	hr/yr	8760	8760	8760	8760	8760	8760	8760	8760
operating hours no DB	hrs/yr	0	0	0	0	0	0	0	0
operating hours with DB	hrs/yr	8760	8760	8760	8760	8760	8760	8760	8760
steady state emissions per turbine	tpy	100.74	61.32	56.94	20.148	83.22	91.98	10.80	1620425

Both Turbines

number of turbines		2	2	2	2	2	2	2	2
total plant emissions emissions - steady state	tpy	201.48	122.64	113.88	40.30	166.44	183.96	21.60	3240849.60

Plant gross output (case 7)	MW	688.137	688.137	688.137	688.137	688.137	688.137	688.137	688.137
Plant net output (case 7)	MW	677.3	677.3	677.3	677.3	677.3	677.3	677.3	677.3
lbs CO2 per MW-hr gross (case 7)	lb/MW hr								794
lbs CO2 per MW-hr gross (case 7) + 12.8% margi	lb/MW hr								896.0

Summary of Annual Emissions
Oregon Clean Energy

8/23/2012

Overall Assumptions

SU/SD information from Siemens Technical Package Dated 8-10-12

cold starts/unit	50	number/yr	2.97	hours/event	64	minimum hours downtime with event	178	minutes per event
hot starts/unit	250	number/yr	1.33	hours/event	2	minimum hours downtime with event	80	minutes per event
warm starts/unit	0	number/yr	1.47	hours/event	16	minimum hours downtime with event	88	minutes per event
shutdowns/unit	300	number/yr	0.70	hours/event	1	minimum hours downtime with event	42	minutes per event

Emissions

		NOx	CO	VOC	SO2	PM10/PM2.5
Emissions per cold start	lbs	76	253	63	7.75	24
Emissions per hot start	lbs	64	130	51	3.75	12
Emissions per warm start	lbs	67	130	52	4.25	14
Emissions per shutdown	lbs	32	80	31	1.75	6.2
cold start - duration of event (include downtime)	hrs	66.97	66.97	66.97	66.97	66.97
hot start - duration of event (include downtime)	hrs	3.33	3.33	3.33	3.33	3.33
warm start - duration of event (include downtime)	hrs	17.47	17.47	17.47	17.47	17.47
shutdown - duration of event (include downtime)	hrs	1.70	1.70	1.70	1.70	1.70
cold start - avg hourly emissions (including downtime)	lb/hr	1.13	3.78	0.94	0.12	0.358
hot start - avg hourly emissions (including downtime)	lb/hr	19.20	39.00	15.30	1.1	3.600
warm start - avg hourly emissions (including downtime)	lb/hr	3.84	7.44	2.98	0.24	0.80
shutdown - avg hourly emissions (including downtime)	lb/hr	18.82	47.06	18.24	1.03	3.65
steady state average hourly		23.00	14.00	13.00	4.60	19.00
cold start - self correcting?	-	yes	yes	yes	yes	yes
hot start - self correcting?	-	yes	no	no	yes	yes
warm start - self correcting?	-	yes	yes	yes	yes	yes
shutdown - self correcting?	-	yes	no	no	yes	yes

Dispersion Modeling Parameters (per turbine)

	Exhaust Flow	Temp	Temp	Stack Diameter	Exit Velocity	Exit Velocity
	acfm	F	K	ft	ft/min	m/s
Cold Start	830000	180	355.2	22	2183	11.09
Hot Start	915000	180	355.2	22	2407	12.23
Warm Start	904000	180	355.2	22	2378	12.08
Shutdown	846000	180	355.2	22	2226	11.31

Dispersion Modeling Emissions (per turbine)

		NOx	CO	VOC	SO2	PM10/PM2.5
Cold Start	g/s	3.23	10.75	2.68	0.33	1.02
Hot Start	g/s	6.05	12.30	4.82	0.35	1.14
Warm Start	g/s	5.76	11.18	4.47	0.37	1.20
Shutdown	g/s	5.77	14.41	5.58	0.32	1.12

Emissions From Ancillary Equipment
Oregon Clean Energy

Total Emissions form Ancillary Equipment (tpy)

		NOx	CO	VOC	TSP	SO2	PM10/ PM2.5	lead (Pb)	H2SO4	CO2
Auxilliary Boiler	tpy	3.94	14.59	1.58	1.30	0.28	1.97	0.00	2.11E-02	46,376.47
Emergency Generator	tpy	4.63	2.89	0.65	0.15	0.005	0.17	0.00004927	1.09E-04	580.69
Emergency Fire Pump	tpy	0.36	0.36	0.05	0.018	0.0007	0.021	0.000006125	1.36E-05	72.19
TOTAL	tpy	**8.93**	**17.84**	**2.28**	**1.47**	**0.28**	**2.16**	**0.0000554**	**2.13E-02**	**47,029.35**

Emissions (lb/hr)

		NOx	CO	VOC	TSP	SO2	PM10/ PM2.5	lead (Pb)
Auxilliary Boiler		0.900	3.330	0.360	0.297	0.063	0.45	0.00E+00
Emergency Generator		18.527	11.564	2.618	0.588	0.021	0.66	1.97E-04
Emergency Fire Pump		1.439	1.438	0.203	0.073	0.003	0.08	2.45E-05

Emissions for Modeling (g/s) - annual average

		NOx	CO	VOC	SO2	PM10/ PM2.5	lead (Pb)
Auxilliary Boiler		0.114	0.420	0.0454	0.007948	0.056750	0.00E+00
Emergency Generator		0.133	0.083	0.0188	0.000152	0.004756	1.42E-06
Emergency Fire Pump		0.010	0.010	0.0015	0.000019	0.000591	1.76E-07

Emissions for Modeling (g/s) - hourly average

		NOx	CO	VOC	SO2	PM10/ PM2.5	lead (Pb)
Auxilliary Boiler		0.11	0.42	0.05	0.00795	0.06	0.00E+00
Emergency Generator		2.34	1.46	0.33	0.00266	0.08	2.49E-05
Emergency Fire Pump		0.18	0.18	0.03	0.00033	0.01	3.09E-06

Auxilliary Boiler

		NOx	CO	VOC	TSP	SO2	PM10/ PM2.5		H2SO4	CO2
Maximum Input Capacity	MMBtu/hr	90	90	90	90	90	90		90	90
Emission Factor	lb/MMscf					0.714				120000
Emission Factor	lb/MMBtu	0.010	0.037	0.004	0.0033	0.0007	0.005		0.00005	117.65
Operating Hours per Years	hrs/yr	8760	8760	8760	8760	8760	8760		8760	8760
Potential Emissions	lb/hr	0.90	3.33	0.36	0.30	0.06	0.45		0.034	10588.235
Potential Emissions	**tpy**	**3.94**	**14.59**	**1.58**	**1.30**	**0.28**	**1.97**		**0.021**	**46376.5**

emission factors for NOx, CO, VOC, PM10/PM2.5 based on emission factors from recent permit (NEC)
emissions of SO2 assume a sulfur content in NG of 0.5 gr/100 dscf
emissions of H2SO4 assumes a 5% conversion of SO2 --> SO3 (on a molar basis)
CO2 Emission Factor from AP-42 Table 1.4-2 (provided in lb/MMscf and converted to lb/MMBtu)

Emissions From Ancillary Equipment
Oregon Clean Energy

Emergency Generator

		NOx	CO	VOC	TSP	SO2	PM10/ PM2.5	lead (Pb)	H2SO4	CO2
Power rating	kW	1500	1500	1500	1500	1500	1500	1500	1500	1500
Power rating	hp	2011.1	2011.1	2011.1	2011.1	2011.1	2011.1	2011.1	2011.1	2011.1
emission factor	g/kW hr	5.61	3.5	0.79	0.18		0.2			
emission factor	lb/MMBtu							1.40E-05	3.10E-05	165.00
emission factor	g/bhp hr					0.0048		4.45E-05	9.85E-05	5.24E+02
emissions	lb/hr	18.527	11.564	2.618	0.588	0.021	0.661	0.0002	4.36E-04	2322.763
operating hours per year	hrs/yr	500	500	500	500	500	500	500	500.00	500.00
hourly emissions (30 min/hr)	lb/hr	9.264	5.782	1.309	0.294	0.011	0.330	0.0001	0.000	1161.381
Potential Emissions	**tpy**	**4.63**	**2.89**	**0.65**	**0.15**	**0.0053**	**0.17**	**4.93E-05**	**0.0001091**	**580.7**

emission factors for NOx, CO, VOC and PM10/PM2.5 based on Tier 2 emission standards provided in 40 CFR 89 Subpart B - Table 1.

*The Tier 2 emission factor for NOx and VOC (non methane hydrocarbons (NMHC)) provided in Subpart B - Table 1 is provided as a combined factor (NOx+NMHC). The breakdown of NOx and NMHC in this total factor was estimated using the Tier 1 factors provided in 40 CFR 89 Subpart B Table 1. For example, the NOx emission factor was determined via the following equation: 6.4 * (9.2/(9.2+1.3))*

TSP emission factor = 89% of PM-10 emission factor, based on AP-42, Table 3.4-2 distribution of particulate emissions for stationary diesel engines.

emission factor for SO2 based on ULSD fuel oil (sulfur content of 15 ppmw or 0.0015 lb/MMBtu) and fuel input ratio of 7000 Btu/hp hr (AP-42 Section 3.3)

emission factor for Pb based on AP-42 Section 3.1 (1.4e-5 lb/MMBtu) and fuel input of 7000 Btu/hp hr (AP-42 Section 3.3)

emission factor for H2SO4 (0.000031 lb/MMBTu) from Page 276 of Toxic air pollutant emission factors - a compilation for selected compounds and sources (EPA, 1990) and fuel input ratio of 7000 Btu/hp

emission factor for CO2 (165 lb/MMBtu) from AP-42 Table 3.4-1

emission factor for CH4 (0.0081 lb/MMBtu) from AP-42 Table 3.4-1

emission factor for N2O (0.6 g/MMBtu) from Climate Registry General Reporting Protocol (GRP) (Emission Factors by Fuel Type and Sector)

Emergency Fire Pump

		NOx	CO	VOC	TSP	SO2	PM10/ PM2.5	lead (Pb)	H2SO4	CO2
Power rating	hp	250.0	250.0	250.0	250.0	250.0	250.0	250.0	250.0	250.0
Power rating	kW	186.5	186.5	186.5	186.5	186.5	186.5	186.5	186.5	186.5
emission factor	g/kW hr	3.50	3.5	0.50	0.18		0.2			
	lb/MMBtu							1.40E-05	3.10E-05	165.00
emission factor	g/bhp hr					0.0048		4.45E-05	9.85E-05	5.24E+02
emissions	lb/hr	1.439	1.438	0.203	0.073	0.003	0.082	2.45E-05	5.43E-05	2.89E+02
operating hours per year	hrs/yr	500	500	500	500	500	500	500	500	500
hourly emissions (30 min/hr)	lb/hr	0.720	0.719	0.102	0.037	0.001	0.041	0.00001	0.000	144.375
Potential Emissions	**tpy**	**0.36**	**0.36**	**0.05**	**0.018**	**0.0007**	**0.021**	**6.13E-06**	**1.36E-05**	**72.1875**

emission factors for NOx, CO, VOC and PM10/PM2.5 based on post -2009 emission standards provided in 40 CFR 60 Subpart IIII - Table 4

*The post-2009 emission factor for NOx and VOC (non methane hydrocarbons (NMHC)) provided in Subpart IIII - Table 4 is provided as a combine factor (NOx+NMHC). The breakdown of NOx and NMHC in this total factor was estimated using the Tier 1 factors provided in 40 CFR 89 Subpart B Table 1. For example, the NOx emission factor was determined via the following equation: 0.4 * (9.2/(9.2+1.3))*

TSP emission factor = 89% of PM-10 emission factor, based on AP-42, Table 3.4-2 distribution of particulate emissions for stationary diesel engines.

emission factor for SO2 based on ULSD fuel oil (sulfur content of 15 ppmw or 0.0015 lb/MMBtu) and fuel input ratio of 7000 Btu/hp hr (AP-42 Section 3.3)

emission factor for Pb based on AP-42 Section 3.1 (1.4e-5 lb/MMBtu) and fuel input of 7000 Btu/hp hr (AP-42 Section 3.3)

emission factor for H2SO4 (0.000031 lb/MMBTu) from Toxic air pollutant emission factors - a compilation for selected compounds and sources (EPA, 1990) and fuel input ratio of 7000 Btu/hp

emission factor for CO2 (165 lb/MMBtu) from AP-42 Table 3.4-1

emission factor for CH4 (0.0081 lb/MMBtu) from AP-42 Table 3.4-1

emission factor for N2O (0.6 g/MMBtu) from Climate Registry General Reporting Protocol (GRP) (Emission Factors by Fuel Type and Sector)

Emission Factors by Fuel Type and Sector

Fuel Type	Sector	CO_2 Emission Factor	CH_4 Emission Factor	N_2O Emission Factor
Natural Gas	Industrial	0.054 kg/scf	1 g/MMBtu	0.1 g/MMBtu
Coal	Industrial	2,054.32 kg/short ton	11 g/MMBtu	1.6 g/MMBtu
Distillate Fuel	Commercial	10.13 kg/gallon	11 g/MMBtu	0.6 g/MMBtu

Estimated Emissions from Cooling Tower
Oregon Clean Energy

Emissions

		PM10	PM2.5
recirculating water flow	gpm	133700	133700
drift eliminator efficiency	%	0.0005%	0.0005%
TDS in recirculating water	mg/l	3000	3000
particle size distribution	%	100%	100%
estimated emissions	lb/hr	1.003	1.003
estimated emissions	tpy	4.394	4.394
number of cells	-	12	12
estimated emissions per cell	lb/hr	0.08	0.084
estimated emissions per cell	g/s	0.0105	0.0105

Dispersion Modeling Parameters (per cell)

diameter	m	10
diameter	ft	32.8
exhaust temperature	K	ambient + 10 K
exit velocity	m/s	8.5

NAPD - Oregon *italics indicate calculations added by ARCADIS* **Estimated Emissions Data Sheet**

Estimated SGT6-5000F(5)ee Exhaust Stack Emissions 1.108632918 **10-Aug-12**

Combined Cycle / Ultra-Low NOX Combustor

SITE CONDITIONS:	**CASE 1**	**CASE 2**	**CASE 3**	**CASE 4**	**CASE 5 - ISO with DB**	**CASE 6**	**CASE 7 - ISO no DB**	**CASE 8**	**CASE 9**	**CASE 10**		**MAX HOURLY - No**	**MAX HOURLY -**
FUEL TYPE	Natural Gas	Natural Gas	Natural Gas	Natural Gas	Natural Gas	Natural Gas	Natural Gas	Natural Gas	Natural Gas	Natural Gas		Natural Gas	Natural Gas
LOAD LEVEL	100%	100%	100%	100%	100%	100%	100%	100%	100%	100%		100%	100%
NET FUEL HEATING VALUE, Btu/lbm (LHV)	20,445	20,445	20,445	20,445	20,445	20,445	20,445	20,445	20,445	20,445			
GROSS FUEL HEATING VALUE, Btu/lbm (HHV)	22,666	22,666	22,666	22,666	22,666	22,666	22,666	22,666	22,666	22,666			
EVAPORATIVE COOLER STATUS	ON	OFF	ON	OFF	ON	OFF	ON	OFF	OFF	OFF			
DUCT BURNER STATUS	ON	ON	OFF	OFF	ON	ON	OFF	OFF	ON	OFF		OFF	ON
AMBIENT DRY BULB TEMPERATURE, °F	90	90	90	90	59	59	59	59	0	0			
AMBIENT RELATIVE HUMIDITY, %	45	45	45	45	71	71	71	71	100	100			
BAROMETRIC PRESSURE, psia	14.387	14.387	14.387	14.387	14.387	14.387	14.387	14.387	14.387	14.387			
GT FUEL FLOW, lb m/hr	98,076	93,157	98,179	93,191	99,882	100,296	99,963	100,445	98,347	98,385			
GT FUEL FLOW, MMBtu/hr HHV	*2,223*	*2,111*	*2,225*	*2,112*	*2,264*	*2,273*	*2,266*	*2,277*	*2,229*	*2,230*			
DUCT BURNER FUEL FLOW, lb m/hr	34,307	35,807	0	0	33,821	33,303	0	0	37,115	0			
DUCT BURNER FUEL FLOW, MMBtu/hr HHV	*778*	*812*	*0*	*0*	*767*	*755*	*0*	*0*	*841*	*0*			
TOTAL FUEL FLOW, MMBtu/hr HHV	*3,001*	*2,923*	*2,225*	*2,112*	*3,031*	*3,028*	*2,266*	*2,277*	*3,070*	*2,230*			
HRSG STACK EXHAUST GAS													
EXHAUST FLOW, lb m/hr	4,477,436	4,304,309	4,443,128	4,268,502	4,506,761	4,559,203	4,472,940	4,525,900	4,317,666	4,280,552			
OXYGEN, Vol. %	9.47	9.42	12.19	12.38	9.66	9.83	12.33	12.42	9.25	12.31			
CARBON DIOXIDE, Vol. %	5.07	5.14	3.81	3.77	5.11	5.04	3.87	3.84	5.4	3.99			
WATER, Vol. %	12.42	12.07	10	9.43	11.24	10.96	8.85	8.64	10.63	7.88			
NITROGEN, Vol. %	72.18	72.5	73.13	73.55	73.12	73.29	74.06	74.21	73.83	74.92			
ARGON, Vol. %	0.86	0.87	0.87	0.87	0.88	0.88	0.89	0.89	0.89	0.9			
MOLECULAR WEIGHT	28.06	28.11	28.44	28.45	28.19	28.22	28.71	28.4	28.29	28.52			
HRSG EXHAUST STACK EMISSIONS (Based on USEPA Test Methods):													
NOX, ppmvd @ 15% O2	2	2	2	2	2	2	2	2	2	2	NOX, ppmvd @ 15% O2	2	2
NOX, lbm/hr as NO2	23	22	17	16	23	23	17	17	23	17	NOX, lbm/hr as NO2	17	23
NH3, ppmvd @ 15% O2	5	5	5	5	5	5	5	5	5	5	NH3, ppmvd @ 15% O2	5	5
NH3, lbm/hr	21	20	15	15	21	21	16	16	21	16	NH3, lbm/hr	16	21
CO, ppmvd @ 15% O2	2	2	2	2	2	2	2	2	2	2	CO, ppmvd @ 15% O2	2	2
CO, lbm/hr	14	14	10	10	14	14	10	11	14	10	CO, lbm/hr	11	14
CO2, lbm/hr	366791	356,748	269,782	256,399	369,960	369,020	273,289	277,434	373,772	271,440	CO2, lbm/hr	277434	373772
VOC, ppmvd @ 15% O2 as CH4	3.4	3.5	1	1	3.3	3.3	1	1	3.5	1	VOC, ppmvd @ 15% O2 as CH4	1	3.5
VOC, lbm/hr as CH4	13	14	2.9	2.8	13	13	3	3	14	3	VOC, lbm/hr as CH4	3	14
SO2, lbm/hr	4.5	4.4	3.4	3.2	4.6	4.6	3.4	3.4	4.6	3.4	SO2, lbm/hr	3.4	4.6
PARTICULATES, lbm/hr	19	19	11	10	19	19	11	11	20	11	PARTICULATES, lbm/hr	11	20
H2SO4, lbm/hr	2.41	2.36	1.82	1.72	2.47	2.47	1.82	1.82	2.47	1.82	H2SO4, lbm/hr	1.82	2.47
NOx (lbm/MMBtu HHV)	*0.00767*	*0.00753*	*0.00764*	*0.00757*	*0.00759*	*0.00760*	*0.00750*	*0.00747*	*0.00749*	*0.00762*	*NOx (lbm/MMBtu HHV)*	0.0076	0.0077
NH3 (lbm/MMBtu HHV)	*0.00700*	*0.00684*	*0.00674*	*0.00710*	*0.00693*	*0.00693*	*0.00706*	*0.00703*	*0.00684*	*0.00717*	*NH3 (lbm/MMBtu HHV)*	0.0072	0.0070
CO (lbm/MMBtu HHV)	*0.00467*	*0.00479*	*0.00449*	*0.00473*	*0.00462*	*0.00462*	*0.00441*	*0.00483*	*0.00456*	*0.00448*	*CO (lbm/MMBtu HHV)*	0.0048	0.0048
VOC (lbm/MMBtu HHV)	*0.00433*	*0.00479*	*0.00130*	*0.00133*	*0.00429*	*0.00429*	*0.00132*	*0.00132*	*0.00456*	*0.00135*	*VOC (lbm/MMBtu HHV)*	0.0013	0.0048
SO2 (lbm/MMBtu HHV)	*0.00150*	*0.00151*	*0.00153*	*0.00151*	*0.00152*	*0.00152*	*0.00150*	*0.00149*	*0.00150*	*0.00152*	*SO2 (lbm/MMBtu HHV)*	0.0015	0.0015
PM10/PM2.5 (lbm/MMBtu HHV)	*0.00633*	*0.00650*	*0.00494*	*0.00473*	*0.00627*	*0.00627*	*0.00485*	*0.00483*	*0.00651*	*0.00493*	*PM10/PM2.5 (lbm/MMBtu HHV)*	0.0049	0.0065
H2SO4 (lbm/MMBtu HHV)	*0.00080*	*0.00081*	*0.00082*	*0.00081*	*0.00081*	*0.00081*	*0.00080*	*0.00080*	*0.00080*	*0.00082*	H2SO4 (lbm/MMBtu HHV)	0.0008	0.0008

NOTES:

- All data is estimated and not guaranteed. Performance is based on new and clean condition.
- Gas fuel composition is 96.771% CH 4, 1.129% C2H6, 0.093% C3H8, 0.014% iC4H10, 0.014% nC4H10, 0.004% iC5H12, 0.004% nC5H12, 0.009% C6H14, 0.242% N2, 1.68% CO2 , 0.005 H2, and 0.5 grains S/100 SCF.
- Gas fuel must be in compliance with the Siemens Gas Fuel Specification.
- NOX emissions assume the use of an SCR system with ammonia injection.
- CO and VOC emissions assume the use of an oxidation catalyst.
- VOC consist of total hydrocarbons excluding methane and ethane and are expressed in terms of methane (CH 4).
- Particulates are per US EPA Method 5 and 202 (front and back half).
- Emissions exclude ambient air contributions and assume steady-state conditions.
- Please be advised that the information contained in this transmittal has been prepared and is being transmitted per customer request specifically for information purposes only. Such information is not intended to be used for evaluation of plant design. Data included in any permit application or Environmental Impact Statement are strictly the customer's responsibility. Siemens is available to review permit application data upon request.

Siemens Energy, Inc. **Proprietary Information**

Oregon Clean Energy
Dispersion Modeling Parameters (per turbine)

developed by ARCADIS based on Siemens Data (as provided below)

SITE CONDITIONS:	CASE 1	CASE 2	CASE 3	CASE 4	CASE 5	CASE 6	CASE 7	CASE 8	CASE 9	CASE 10
LOAD LEVEL	100%	100%	100%	100%	100%	100%	100%	100%	100%	100%
AMBIENT DRY BULB TEMPERATURE, °F	90	90	90	90	59	59	59	59	0	0
AMBIENT RELATIVE HUMIDITY, %	45	45	45	45	71	71	71	71	100	100
exhaust flow rate (scfm)	1,043,033	1,000,919	1,021,211	980,730	1,045,023	1,056,059	1,018,395	1,041,701	997,637	981,085
stack gas temperature (K)	350	350	350	350	350	350	350	350	350	350
stack gas temperature (F)	170.6	170.6	170.6	170.6	170.6	170.6	170.6	170.6	170.6	170.6
exhaust flow rate (acfm)	1,224,835	1,175,381	1,199,210	1,151,673	1,227,172	1,240,132	1,195,903	1,223,271	1,171,526	1,152,090
stack diameter (ft)	22	22	22	22	22	22	22	22	22	22
stack exit velocity (ft/min)	3222	3092	3155	3030	3228	3262	3146	3218	3082	3031
stack exit velocity (m/s)	16.37	15.71	16.03	15.39	16.40	16.57	15.98	16.35	15.66	15.40
NOx emissions (g/s)	2.90	2.77	2.14	2.02	2.90	2.90	2.14	2.14	2.90	2.14
CO emissions (g/s)	1.77	1.77	1.26	1.26	1.77	1.77	1.26	1.39	1.77	1.26
SO2 emissions (g/s)	0.57	0.55	0.43	0.40	0.58	0.58	0.43	0.43	0.58	0.43
PM10/PM2.5 emissions (g/s)	2.40	2.40	1.39	1.26	2.40	2.40	1.39	1.39	2.52	1.39

NAPD - Oregon **Estimated Emissions Data Sheet**
Estimated SGT6-5000F(5)ee Exhaust Stack Emissions **10-Aug-12**
Combined Cycle / Ultra-Low NOX Combustor

SITE CONDITIONS:	CASE 1	CASE 2	CASE 3	CASE 4	CASE 5	CASE 6	CASE 7	CASE 8	CASE 9	CASE 10
FUEL TYPE	Natural Gas	Natural Gas	Natural Gas	Natural Gas	Natural Gas	Natural Gas	Natural Gas	Natural Gas	Natural Gas	Natural Gas
LOAD LEVEL	100%	100%	100%	100%	100%	100%	100%	100%	100%	100%
NET FUEL HEATING VALUE, Btu/lbm (LHV)	20,445	20,445	20,445	20,445	20,445	20,445	20,445	20,445	20,445	20,445
GROSS FUEL HEATING VALUE, Btu/lbm (HHV)	22,666	22,666	22,666	22,666	22,666	22,666	22,666	22,666	2 22,666	22,666
EVAPORATIVE COOLER STATUS	ON	OFF	ON	OFF	ON	OFF	ON	OFF	OFF	OFF
DUCT BURNER STATUS	ON	ON	OFF	OFF	ON	ON	OFF	OFF	ON	OFF
AMBIENT DRY BULB TEMPERATURE, °F	90	90	90	90	59	59	59	59	0	0
AMBIENT RELATIVE HUMIDITY, %	45	45	45	45	71	71	71	71	100	100
BAROMETRIC PRESSURE, psia	14.387	14.387	14.387	14.387	14.387	14.387	14.387	14.387	14.387	14.387
GT FUEL FLOW, lb m/hr	98,076	93,157	98,179	93,191	99,882	100,296	99,963	100,445	98,347	98,385
DUCT BURNER FUEL FLOW, lb m/hr	34,307	35,807	---	---	33,821	33,303	---	---	37,115	---
HRSG STACK EXHAUST GAS										
EXHAUST FLOW, lb m/hr	4,477,436	4,304,309	4,443,128	4,268,502	4,506,761	4,559,203	4,472,940	4,525,900	4,317,666	4,280,552
OXYGEN, Vol. %	9.47	9.42	12.19	12.38	9.66	9.83	12.33	12.42	9.25	12.31
CARBON DIOXIDE, Vol. %	5.07	5.14	3.81	3.77	5.11	5.04	3.87	3.84	5.4	3.99
WATER, Vol. %	12.42	12.07	10	9.43	11.24	10.96	8.85	8.64	10.63	7.88
NITROGEN, Vol. %	72.18	72.5	73.13	73.55	73.12	73.29	74.06	74.21	73.83	74.92
ARGON, Vol. %	0.86	0.87	0.87	0.87	0.88	0.88	0.89	0.89	0.89	0.9
MOLECULAR WEIGHT	28.06	28.11	28.44	28.45	28.19	28.22	28.71	28.4	28.29	28.52
HRSG EXHAUST STACK EMISSIONS (Based on USEPA Test Methods):										
NOX, ppmvd @ 15% O2	2	2	2	2	2	2	2	2	2	2
NOX, lbm/hr as NO2	23	22	17	16	23	23	17	17	23	17
NH3, ppmvd @ 15% O2	5	5	5	5	5	5	5	5	5	5
NH3, lbm/hr	21	20	15	15	21	21	16	16	21	16
CO, ppmvd @ 15% O2	2	2	2	2	2	2	2	2	2	2
CO, lbm/hr	14	14	10	10	14	14	10	11	14	10
CO2, lbm/hr	366791	356,748	269,782	256,399	369,960	369,020	273,289	277,434	373,772	271,440

VOC, ppmvd @ 15% O2 as CH4	3.4	3.5	1	1	3.3	3.3	1	1	3.5	1
VOC, lbm/hr as CH4	13	14	2.9	2.8	13	13	3	3	14	3
SO2, lbm/hr	4.5	4.4	3.4	3.2	4.6	4.6	3.4	3.4	4.6	3.4
PARTICULATES, lbm/hr	19	19	11	10	19	19	11	11	20	11

NOTES:

- All data is estimated and not guaranteed. Performance is based on new and clean condition.
- Gas fuel composition is 96.771% CH 4, 1.129% C2H6, 0.093% C3H8, 0.014% iC4H10, 0.014% nC4H10, 0.004% iC5H12, 0.004% nC5H12, 0.009% C6H14, 0.242% N2, 1.68% CO2 , 0.005 H2, and 0.5 grains S/100 SCF.
- Gas fuel must be in compliance with the Siemens Gas Fuel Specification.
- NOX emissions assume the use of an SCR system with ammonia injection.
- CO and VOC emissions assume the use of an oxidation catalyst.
- VOC consist of total hydrocarbons excluding methane and ethane and are expressed in terms of methane (CH 4).

- Particulates are per US EPA Method 5 and 202 (front and back half).
- Emissions exclude ambient air contributions and assume steady-state conditions.
- Please be advised that the information contained in this transmittal has been prepared and is being transmitted per customer request specifically for information purposes only. Such information is not intended to be permit application data upon request.

Siemens Energy, Inc. **Proprietary Information**

Appendix C: RBLC Tables

RBLC ID	Facility	County	State	Permit Date	Status	pacity (MMBTU	Basis	Notes	Limit (LB/MMBTU)
* NV-004	HARRAH'S OPERATING COMPANY, IN	Clark	NV	8/20/2009	Draft	35.4	Other	COMMERCIAL BOILER	0.0073
* NV-004	HARRAH'S OPERATING COMPANY, IN	Clark	NV	8/20/2009	Draft	33.48	Other	COMMERCIAL BOILER	0.0075
IA-0062	EMERY GENERATING STATION	Cerro Gordo	IA	12/20/2002	Operational	68	Other	AUX BOILER	0.0164
* NV-004	HARRAH'S OPERATING COMPANY, IN	Clark	NV	8/20/2009	Draft	31.38	Other	COMMERCIAL BOILER	0.0172
* NV-004	HARRAH'S OPERATING COMPANY, IN	Clark	NV	8/20/2009	Draft	16.8	Other	COMMERCIAL BOILER	0.0173
NV-0050	MGM MIRAGE	Clark	NV	11/30/2009		41.64	LAER	BOILER	0.0184
MD-0040	CPV ST CHARLES	Charles	MD	11/12/2008	Not constructed	93	BACT	AUX BOILER	0.02
NM-0042	DEMING ENERGY FACILITY	Luna	NM	12/29/2000		44.1	BACT	AUX BOILER	0.022
* VA-030	WARREN COUNTY FACILITY	Warren	VA	1/14/2008	Draft	97	N/A	AUX BOILER	0.036
NV-0044	HARRAH'S OPERATING COMPANY, IN	Clark	NV	1/4/2007		35.4	BACT	INDUSTRIAL BOILERS	0.036
WI-0226	WPS - WESTON PLANT	Marathon	WI	8/27/2004	Operational	46.2	N/A	BOILER	0.036
* NV-004	HARRAH'S OPERATING COMPANY, IN	Clark	NV	8/20/2009	Draft	24	Other	COMMERCIAL BOILER	0.037
* NV-004	HARRAH'S OPERATING COMPANY, IN	Clark	NV	8/20/2009	Draft	8.37	Other	COMMERCIAL BOILER	0.037
OH-0252	DUKE ENERGY HANGING ROCK ENER	Lawrence	OH	12/28/2004	Operational	30.6	BACT	BOILERS	0.037
OH-0252	DUKE ENERGY HANGING ROCK	Lawrence	OH	12/28/2004	Operational	30.6	BACT	BOILERS	0.037
WA-0292	SATSOP COMBUSTION TURBINE PRO	Grays Harbor	WA	10/23/2001		29.3	BACT	AUX BOILER	0.037
LA-0240	FLOPAM INC.	Iberville	LA	6/14/2010		25.1	BACT	BOILER	0.037
* AL-023	THYSSENKRUPP STEEL AND STAINLE	Mobile	AL	8/17/2007	Draft	64.9	BACT	BOILERS	0.04
* NV-004	HARRAH'S OPERATING COMPANY, IN	Clark	NV	8/20/2009	Draft	14.34	Other	COMMERCIAL BOILER	0.0705
TX-0501	TEXSTAR GAS PROCESS FACILITY	Henderson	TX	7/11/2006		93	BACT	INDUSTRIAL BOILERS	0.076
FL-0285	PROGRESS BARTOW POWER PLANT	Pinellas	FL	1/26/2007	Operational	99	BACT	AUX BOILER	0.08
FL-0286	FPL WEST COUNTY ENERGY CENTER	Palm Beach	FL	1/10/2007	Not constructed	99.8	BACT	AUX BOILER	0.08
WI-0227	PORT WASHINGTON GENERATING ST	Washington	WI	10/13/2004	Operational	97.1	BACT	AUX BOILER	0.08
* OH-032	TITAN TIRE CORPORATION OF BRYAN	Williams	OH	6/5/2008	Draft	50.4	BACT	BOILER	0.082
OH-0309	TOLEDO SUPPLIER PARK- PAINT SHO	Lucas	OH	5/3/2007		20.4	BACT	INDUSTRIAL BOILERS	0.083
MN-0053	FAIRBAULT ENERGY PARK	Rice	MN	7/15/2004	Operational	40	BACT	AUX BOILER	0.084
OK-0129	CHOUTEAU POWER PLANT	Mayes	OK	1/23/2009		33.5	N/A	AUX BOILER	0.15
CA-1127	GENENTECH, INC.	San Mateo	CA	9/27/2005		97	BACT	COMMERCIAL BOILER	.0000 PPMVD @ 3% C

RBLC Review for Auxiliary Boiler - NO_x

Ocean Clean Energy Project

RBLC ID	Facility	County	State	Permit Date	Status	pacity (MMBTU	Basis	Notes	Limit (LB/MMBTU)
CA-0946	LACORR PACKAGING	Los Angeles	CA	7/12/2000		21	LAER	BOILER	0.009
OK-0055	MUSTANG ENERGY PROJECT	Canadian	OK	2/12/2002	Operational	31	Other	AUX BOILER	0.01
CA-1006	HI-COUNTRY	Riverside	CA	12/16/1999		20.9	BACT	BOILER	0.01
* NV-004	HARRAH'S OPERATING COMPANY, IN	Clark	NV	8/20/2009	Draft	24	BACT	COMMERCIAL BOILER	0.0108
MD-0040	CPV ST CHARLES	Charles	MD	11/12/2008	Not constructed	93	LAER	AUX BOILER	0.011
* MD-003	MEDIMMUNE FREDERICK CAMPUS	Frederick	MD	1/28/2008		29.4	LAER	BOILERS	0.011
* VA-038	WARREN COUNTY FACILITY	Warren	VA	1/14/2008	Draft	97	N/A	AUX BOILER	0.011
CA-0940	NATION WIDE BOILER	Alameda	CA	3/15/2000		28.8	LAER	BOILER, PORTABLE	0.011
NV-0050	MGM MIRAGE	Clark	NV	11/30/2009		41.64	Other	BOILER	0.011
* NV-004	HARRAH'S OPERATING COMPANY, IN	Clark	NV	8/20/2009	Draft	8.37	BACT	COMMERCIAL BOILER	0.0146
LA-0240	FLOPAM INC.	Iberville	LA	6/14/2010		25.1	LAER	BOILER	0.015
* NV-004	HARRAH'S OPERATING COMPANY, IN	Clark	NV	8/20/2009	Draft	16.8	BACT	COMMERCIAL BOILER	0.03
NM-0042	DEMING ENERGY FACILITY	Luna	NM	12/29/2000		44.1	BACT	AUX BOILER	0.03
* NV-004	HARRAH'S OPERATING COMPANY, IN	Clark	NV	8/20/2009	Draft	31.38	BACT	COMMERCIAL BOILER	0.0306
* AK-007	INTERNATIONAL STATION POWER PL	Anchorage	AK	12/20/2010		12.5	BACT	AUXILIARY HEATER	0.031
* NV-004	HARRAH'S OPERATING COMPANY, IN	Clark	NV	8/20/2009	Draft	35.4	BACT	COMMERCIAL BOILER	0.035
OH-0309	TOLEDO SUPPLIER PARK- PAINT SHO	Lucas	OH	5/3/2007		20.4	LAER	INDUSTRIAL BOILERS	0.035
NV-0044	HARRAH'S OPERATING COMPANY, IN	Clark	NV	1/4/2007		35.4	BACT	INDUSTRIAL BOILERS	0.035
OH-0252	DUKE ENERGY HANGING ROCK ENER	Lawrence	OH	12/28/2004	Operational	30.6	BACT	BOILERS	0.035
NV-0037	COPPER MOUNTAIN POWER	Clark	NV	5/14/2004	Not constructed	60	BACT	AUX BOILER	0.035
* NV-004	HARRAH'S OPERATING COMPANY, IN	Clark	NV	8/20/2009	Draft	14.34	BACT	COMMERCIAL BOILER	0.0353
WI-0226	WPS - WESTON PLANT	Marathon	WI	8/27/2004	Operational	46.2	N/A	BOILER	0.036
* NV-004	HARRAH'S OPERATING COMPANY, IN	Clark	NV	8/20/2009	Draft	33.48	BACT	COMMERCIAL BOILER	0.0367
* NH-001	CONCORD STEAM CORPORATION	Merrimack	NH	2/27/2009	Draft	76.8	LAER	AUX BOILER (<700 hours/yr)	0.049
OH-0323	TITAN TIRE CORPORATION OF BRYAN	Williams	OH	6/5/2008		50.4	BACT	BOILER	0.049
OR-0048	CARTY PLANT	Morrow	OR	12/29/2010		91	BACT	BOILER	0.049
* OK-013	PRYOR PLANT CHEMICAL	Mayes	OK	2/23/2009	Draft	80	BACT	BOILERS	0.05
FL-0286	FPL WEST COUNTY ENERGY CENTER	Palm Beach	FL	1/10/2007	Not constructed	99.8	BACT	AUX BOILER	0.05
* OK-012	CHOUTEAU POWER PLANT	Mayes	OK	1/23/2009	Draft	33.5	BACT	AUX BOILER	0.07
LA-0244	LAKE CHARLES CHEMICAL COMPLEX	Calcasieu	LA	11/29/2010		21	BACT	START HEATER - BACT DE	0.129

RBLC Review for Auxiliary Boiler - SO_2

RBLC ID	Facility	County	State	Permit Date	Status	pacity (MMBTU	Basis	Notes	Limit (LB/MMBTU)
* NY-009	CAITHNES BELLPORT ENERGY CENTI	Suffolk	NY	5/10/2006	Draft	29.4	BACT	AUX BOILER	0.0005
* NV-004	HARRAH'S OPERATING COMPANY, IN	Clark	NV	8/20/2009	Draft	33.48	Other	COMMERCIAL BOILER	0.0006
* NV-004	HARRAH'S OPERATING COMPANY, IN	Clark	NV	8/20/2009	Draft	35.4	Other	COMMERCIAL BOILER	0.0006
* NV-004	HARRAH'S OPERATING COMPANY, IN	Clark	NV	8/20/2009	Draft	31.83	Other	COMMERCIAL BOILER	0.0006
* NV-004	HARRAH'S OPERATING COMPANY, IN	Clark	NV	8/20/2009	Draft	14.34	Other	COMMERCIAL BOILER	0.0006
* NV-004	HARRAH'S OPERATING COMPANY, IN	Clark	NV	8/20/2009	Draft	24	Other	COMMERCIAL BOILER	0.0006
* NV-004	HARRAH'S OPERATING COMPANY, IN	Clark	NV	8/20/2009	Draft	8.37	Other	COMMERCIAL BOILER	0.0006
* NV-004	HARRAH'S OPERATING COMPANY, IN	Clark	NV	8/20/2009	Draft	16.7	Other	COMMERCIAL BOILER	0.0006
OH-0309	TOLEDO SUPPLIER PARK- PAINT SHO	Lucas	OH	5/3/2007		20.4	BACT	INDUSTRIAL BOILERS	0.0006
WI-0227	PORT WASHINGTON GENERATING ST	Washington	WI	10/13/2004	Operational	97.1	BACT	AUX BOILER	0.0006
AR-0077	BLUEWATER PROJECT	Mississippi	AR	7/22/2004		22	BACT	BOILERS	0.0006
IN-0108	NUCOR STEEL	Montgomery	IN	11/21/2003		34	BACT	BOILER	0.0006
IA-0062	EMERY GENERATING STATION	Cerro Gordo	IA	12/20/2002	Operational	68	Other	AUX BOILER	0.0006
IN-0095	ALLEGHENY ENERGY SUPPLY CO. LL	St. Joseph	IN	12/7/2001	Not constructed	21	BACT	AUX BOILER	0.0006
OH-0251	CENTRAL SOYA COMPANY INC.	Huron	OH	11/29/2001		91.2	BACT	BOILER	0.0006
IN-0087	DUKE ENERGY, VIGO LLC	Vigo	IN	6/6/2001	Not constructed	46	BACT	AUX BOILER	0.0006
IN-0086	MIRANT SUGAR CREEK, LLC	Vigo	IN	5/9/2001	Operational	35	BACT	AUX BOILER	0.0006
OH-0255	AEP WATERFORD ENERGY LLC	Washington	OH	3/29/2001	Operational	85.2	BACT	BOILER	0.0006
NV-0050	MGM MIRAGE	Clark	NV	11/30/2009		41.64	BACT	BOILER	0.0007
* OK-012	CHOUTEAU POWER PLANT	Mayes	OK	1/23/2009	Draft	33.5	N/A	AUX BOILER	0.0009
NV-0044	HARRAH'S OPERATING COMPANY, IN	Clark	NV	1/4/2007		35.4	BACT	INDUSTRIAL BOILERS	0.001
OH-0252	DUKE ENERGY HANGING ROCK ENER	Lawrence	OH	12/28/2004	Operational	30.6	BACT	BOILERS	0.001
MN-0054	MANKATO ENERGY CENTER	Blue Earth	MN	12/4/2003	Not constructed	70	BACT	COMMERCIAL BOILER	0.001
OH-0254	DUKE ENERGY WASHINGTON COUNT	Washington	OH	8/14/2003	Operational	30.6	BACT	BOILER	0.001
VA-0255	VA POWER - POSSUM POINT	Prince William	VA	11/18/2002	Operational	99	Other	AUX BOILER	0.001
OK-0071	MCCLAIN ENERGY FACILITY	McClain	OK	10/25/2001	Operational	22	BACT	AUX BOILER	0.001
OH-0265	DRESDEN ENERGY LLC	Muskingum	OH	10/16/2001	Not constructed	49	BACT	BOILER	0.001
AL-0168	GENPOWER KELLEY LLC	Walker	AL	1/12/2001	Not constructed	83	BACT	BOILER	0.001
AZ-0047	WELLTON MOHAWK GENERATING ST	Yuma	AZ	12/1/2004	Not constructed	38	BACT	AUX BOILER	0.0023
* OK-013	PRYOR PLANT CHEMICAL	Mayes	OK	2/23/2009	Draft	80	BACT	BOILERS	0.0025
* VA-030	WARREN COUNTY FACILITY	Warren	VA	1/14/2008	Draft	97	N/A	AUX BOILER	0.003
* NV-004	HARRAH'S OPERATING COMPANY, IN	Clark	NV	8/20/2009	Draft	16.8	Other	COMMERCIAL BOILER	0.0042
FL-0286	FPL WEST COUNTY ENERGY CENTER	Palm Beach	FL	1/10/2007	Not constructed	99.8	BACT	AUX BOILER	2 GS/100 SCF

RBLC Review for Auxiliary Boiler - PM_{10}

RBLC ID	Facility	County	State	Permit Date	Status	pacity (MMBTU	Basis	Notes	Limit (LB/MMBTU)
OH-0323	TITAN TIRE CORPORATION OF BRYAN	Williams	OH	6/5/2008		50.4	N/A	BOILER	0.0019
* NY-009	CAITHNES BELLPORT ENERGY CENTE	Suffolk	NY	5/10/2006	Draft	29.4	BACT	AUX BOILER	0.0033
AZ-0047	WELLTON MOHAWK GENERATING ST	Yuma	AZ	12/1/2004	Not constructed	38	BACT	AUX BOILER	0.0033
OR-0040	KLAMATH GENERATION, LLC	Klamath	OR	3/12/2003		(50000 LB/H)	BACT	AUX BOILER	0.0042
MD-0040	CPV ST CHARLES	Charles	MD	11/12/2008	Not constructed	93	BACT	AUX BOILER	0.005
LA-0240	FLOPAM INC.	Iberville	LA	6/14/2010		25.1	BACT	BOILER	0.005
* OK-013	PRYOR PLANT CHEMICAL	Mayes	OK	2/23/2009	Draft	80	BACT	BOILERS	0.0063
* NV-004	HARRAH'S OPERATING COMPANY, IN	Clark	NV	8/20/2009	Draft	33.48	Other	COMMERCIAL BOILER	0.0075
* NV-004	HARRAH'S OPERATING COMPANY, IN	Clark	NV	8/20/2009	Draft	14.34	Other	COMMERCIAL BOILER	0.0075
* NV-004	HARRAH'S OPERATING COMPANY, IN	Clark	NV	8/20/2009	Draft	8.37	Other	COMMERCIAL BOILER	0.0075
* NV-004	HARRAH'S OPERATING COMPANY, IN	Clark	NV	8/20/2009	Draft	24	Other	COMMERCIAL BOILER	0.0075
OH-0309	TOLEDO SUPPOLIER PARK- PAINT SH	Lucas	OH	5/3/2007		20.4	BACT	INDUSTRIAL BOILERS	0.0075
NV-0044	HARRAH'S OPERATING COMPANY, IN	Clark	NV	1/4/2007		35.4	BACT	INDUSTRIAL BOILERS	0.0075
WI-0228	WPS - WESTON PLANT	Marathon	WI	10/19/2004	Operational	229.8	BACT	AUX BOILER	0.0075
* AK-007	INTERNATIONAL STATION POWER PL	Anchorage	AK	12/20/2010		12.5	BACT	AUXILIARY HEATER	0.0075
* NV-004	HARRAH'S OPERATING COMPANY, IN	Clark	NV	8/20/2009	Draft	35.4	Other	COMMERCIAL BOILER	0.0076
* NV-004	HARRAH'S OPERATING COMPANY, IN	Clark	NV	8/20/2009	Draft	31.38	Other	COMMERCIAL BOILER	0.0076
* NV-004	HARRAH'S OPERATING COMPANY, IN	Clark	NV	8/20/2009	Draft	21	Other	COMMERCIAL BOILER	0.0076
* NV-004	HARRAH'S OPERATING COMPANY, IN	Clark	NV	8/20/2009	Draft	16.8	Other	COMMERCIAL BOILER	0.0077
NV-0050	MGM MIRAGE	Clark	NV	11/30/2009		41.64	Other	BOILER	0.0077
* NV-004	HARRAH'S OPERATING COMPANY, IN	Clark	NV	8/20/2009	Draft	21	Other	COMMERCIAL BOILER	0.0078
OH-0252	DUKE ENERGY HANGING ROCK ENER	Lawrence	OH	12/28/2004	Operational	30.6	BACT	BOILERS	0.01
LA-0244	LAKE CHARLES CHEMICAL COMPLEX	Calcasieu	LA	11/29/2010		21	BACT	START HEATER - BACT DE	0.01
FL-0286	FPL WEST COUNTY ENERGY CENTER	Palm Beach	FL	1/10/2007	Not constructed	99.8	BACT	AUX BOILER	)000 G S/100 SCF GA
OR-0048	CARTY PLANT	Morrow	OR	12/29/2010		91	BACT	BOILER	2.5 LB/MMCF

RBLC ID	Facility	County	State	Permit Date	Status	pacity (MMBTU	Basis	Notes	Limit (LB/MMBTU)
MD-0040	CPV ST CHARLES	Charles	MD	11/12/2008	Not constructed	93	LAER	AUX BOILER	0.002
NV-0050	MGM MIRAGE	Clark	NV	11/30/2009		41.64	Other	BOILER	0.0024
IN-0108	NUCOR STEEL	Montgomery	IN	11/21/2003		34	BACT	INDUSTRIAL BOILERS	0.0026
LA-0240	FLOPAM INC.	Iberville	LA	6/14/2010		25.1	BACT	BOILER	0.003
AZ-0047	WELLINGTON MOHAWK GENERATING	Yuma	AZ	12/1/2004	Not constructed	38	BACT	AUX BOILER	0.0033
GA-0098	RINCON POWER PLANT	Effingham	GA	3/24/2003	Not constructed	83	Other	AUX BOILER	0.004
VA-0255	VA POWER - POSSUM POINT	Prince William	VA	11/18/2002	Operational	99	Other	AUX BOILER	0.004
AL-0179	TENASKA TALLADEGA GENERATING S	Talladega	AL	10/3/2001	Not constructed	30	BACT	AUX BOILER	0.004
OH-0255	AEP WATERFORD ENERGY LLC	Washington	OH	3/29/2001	Operational	85.2	BACT	AUX BOILER	0.0041
NV-0044	HARRAH'S OPERATING COMPANY, IN	Clark	NV	1/4/2007		35.4	BACT	INDUSTRIAL BOILERS	0.005
OK-0046	THUNDERBIRD POWER PLT	Cleveland	OK	5/17/2001	Not constructed	20	BACT	AUX BOILER	0.005
* NV-004	HARRAH'S OPERATING COMPANY, IN	Clark	NV	8/20/2009	Draft	35.4	Other	COMMERCIAL BOILER	0.0054
* NV-004	HARRAH'S OPERATING COMPANY, IN	Clark	NV	8/20/2009	Draft	33.48	Other	COMMERCIAL BOILER	0.0054
* NV-004	HARRAH'S OPERATING COMPANY, IN	Clark	NV	8/20/2009	Draft	31.38	Other	COMMERCIAL BOILER	0.0054
* NV-004	HARRAH'S OPERATING COMPANY, IN	Clark	NV	8/20/2009	Draft	16.8	Other	COMMERCIAL BOILER	0.0054
* NV-004	HARRAH'S OPERATING COMPANY, IN	Clark	NV	8/20/2009	Draft	8.37	Other	COMMERCIAL BOILER	0.0054
* NV-004	HARRAH'S OPERATING COMPANY, IN	Clark	NV	8/20/2009	Draft	24	Other	COMMERCIAL BOILER	0.0054
* NV-004	HARRAH'S OPERATING COMPANY, IN	Clark	NV	8/20/2009	Draft	14.34	Other	COMMERCIAL BOILER	0.0054
OH-0309	TOLEDO SUPPLIER PARK- PAINT SHO	Lucas	OH	5/3/2007		20.4	LAER	INDUSTRIAL BOILERS	0.0054
IA-0062	EMERY GENERATING STATION	Cerro Gordo	IA	12/20/2002	Operational	68	Other	AUX BOILER	0.0054
NC-0094	GENPOWER EARLEYS, LLC	Hertford	NC	1/9/2002	Not constructed	83	BACT	AUX BOILER	0.0054
IN-0095	ALLEGHENY ENERGY SUPPLY CO. LL	St. Joseph	IN	12/7/2001	Not constructed	21	BACT	AUX BOILER	0.0054
IN-0087	DUKE ENERGY, VIGO LLC	Vigo	IN	6/6/2001	Not constructed	46	BACT	AUX BOILER	0.0054
IN-0086	MIRANT SUGAR CREEK, LLC	Vigo	IN	5/9/2001	Operational	35	BACT	AUX BOILER	0.0054
WI-0227	PORT WASHINGTON GENERATING ST	Washington	WI	10/13/2004	Operational	97.1	BACT	AUX BOILER	0.00545829
MS-0085	Dart Container Corporation	Clarke	MS	1/31/2007		33.5	BACT	NATURAL GAS FIRED BOIL	0.0055
VA-0308	WARREN COUNTY FACILITY	Warren	VA	1/14/2008	Not constructed	97	N/A	AUX BOILER	0.005979381
OH-0252	DUKE ENERGY HANGING ROCK	Lawrence	OH	12/28/2004	Operational	30.6	BACT	BOILERS	0.016

RBLC Review for Auxiliary Boiler - H_2SO_4

Ocean Clean Energy Project

Facility	County	State	Permit Date	Status	pacity (MMBTU/	Basis	Notes	Limit (LB/MMBTU)
CPV ST CHARLES	Charles	MD	11/12/2008	Not constructed	93	BACT	AUX BOILER	0.0001
WPS - WESTON PLANT	Marathon	WI	10/19/2004	Operational	229.8	BACT	natural gas heaters	0.0001 lb/MMBtu
MANKATO ENERGY CENTER	Blue Earth	MN	12/4/2003	Not constructed	70	BACT	BOILER	0.8 G S/100 SCF GAS

RBLC Review for Large Combined Cycle Turbines - CO

Ocean Clean Energy Project

RBLC ID	Facility	County	State	Permit Date	Basis	Control	Limit (PPM)	Notes
CT-0151	KLEEN ENERGY SYSTEMS, LLC	Middlesex	CT	2/25/2008	BACT-PSD	CO Catalyst	0.9	1.7 PPMVD @ 15 % O2 with duct b
*VA-0308	WARREN COUNTY FACILITY	Warren	VA	1/14/2008	BACT-PSD	Oxidation catalyst	1.3	Without power augmentation
	CPV Valley Energy Center	Wawayanda	NY	NA			2.0	
	Caithness Long Island Energy	New York	NY	NA			2.0	
	Brockton Clean Energy	Brockton	MA	NA			2.0	
TX-0590	KING POWER STATION	Harris	TX	8/5/2010	BACT-PSD	Oxidation catalyst	2.0	
ID-0018	LANGLEY GULCH POWER PLANT	Payette	ID	6/25/2010	BACT-PSD	Oxidation catalyst	2.0	
GA-0138	LIVE OAKS POWER PLANT	Glynn	GA	4/8/2010	BACT-PSD	Oxidation catalyst	2.0	
*TX-0546	PATTILLO BRANCH POWER PLANT	Fannin	TX	6/17/2009	BACT-PSD	Oxidation catalyst	2.0	
NJ-0074	WEST DEPTFORD ENERGY	Gloucester	NJ	5/6/2009	BACT-PSD	Oxidation catalyst	2.0	
MI-0366	BERRIEN ENERGY, LLC	Berrien	MI	4/13/2005	BACT-PSD	Oxidation catalyst	2.0	4.0 PPMVD PER TURBINE/DUCT
OR-0039	COB ENERGY FACILITY, LLC	Klamath	OR	12/30/2003	BACT-PSD	Oxidation catalyst	2.0	
CA-1096	VERNON CITY LIGHT & POWER	Los Angeles	CA	5/27/2003	BACT-PSD	SCR, Oxidation catalyst	2.0	
CA-1097	MAGNOLIA POWER PROJECT, SCP	Los Angeles	CA	5/27/2003	BACT-PSD	SCR, Oxidation catalyst	2.0	
WA-0315	SUMAS ENERGY 2 GENERATION F	Whatcom	WA	4/17/2003	BACT-PSD	Oxidation catalyst	2.0	
GA-0105	MCINTOSH COMBINED CYCLE FAC	Effingham	GA	4/17/2003	BACT-PSD	Oxidation catalyst	2.0	
WA-0291	WALLULA POWER PLANT	Walla Walla	WA	1/3/2003	Other	Oxidation catalyst	2.0	
NJ-0043	LIBERTY GENERATING STATION	Union	NJ	3/28/2002	Other	CO Catalyst	2.0	
GA-0102	WANSLEY COMBINED CYCLE ENE	Heard	GA	1/15/2002	BACT-PSD	Good combustion practices	2.0	
WA-0288	LONGVIEW ENERGY DEVELOPMEN	Cowlitz	WA	9/4/2001	Other	Oxidation catalyst	2.0	
NJ-0058	PSEG FOSSIL LLC LINDEN GENER	Union	NJ	8/24/2001	BACT-PSD	Oxidation catalyst	2.0	
NJ-0059	COGEN TECHNOLOGIES LINDEN V	Union	NJ	5/9/2001	Other	Oxidation catalyst	2.0	
WA-0302	GOLDENDALE ENERGY PROJECT	Klickitat	WA	2/23/2001	BACT-PSD	Oxidation catalyst	2.0	
NV-0034	LAS VEGAS COGENERATION FACI	Clark	NV	11/13/2000	BACT-PSD	Oxidation catalyst	2.0	
MA-0027	CABOT POWER CORPORATION	Suffolk	MA	5/7/2000	BACT-PSD	Oxidation catalyst	2.0	
AZ-0043	DUKE ENERGY ARLINGTON VALLE	Maricopa	AZ	11/12/2003	BACT-PSD	Oxidation catalyst	3.0	
TX-0600	THOMAS C. FERGUSON POWER PL	Llano	TX	9/1/2011	BACT-PSD	Oxidation catalyst	4.0	
NJ-0066	AES RED OAK LLC	Middlesex	NJ	2/16/2006	BACT-PSD	Oxidation catalyst	4.0	
ID-0010	MIDDLETON FACILITY	Canyon	ID	10/19/2001	BACT-PSD	None	5.0	2.0000 PPM @ 15% O2 W/ DB
FL-0303	FPL WEST COUNTY ENERGY CENT	Palm Beach	FL	7/30/2008	BACT-PSD	Good combustion practices	6.0	24-hour standards
TX-0552	WOLF HOLLOW POWER PLANT NO	Hood	TX	3/3/2010	BACT-PSD	Good combustion practices	11.0	GE7FA
TX-0551	PANDA SHERMAN POWER STATIO	Grayson	TX	2/3/2010	BACT-PSD	Good combustion practices	15.0	Combined-cycle mode.
*TX-0547	LAMAR POWER PARTNERS II LLC	Lamar	TX	6/22/2009	BACT-PSD	Good combustion practices	15.0	
*TX-0548	MADISON BELL ENERGY CENTER	Madison	TX	8/18/2009	BACT-PSD	Good combustion practices	17.5	
LA-0136	PLAQUEMINE COGENERATION FA	Iberville	LA	7/23/2008	BACT-PSD	Good combustion practices	25.0	

RBLC Review for Large Combined Cycle Turbines - NO_x

Ocean Clean Energy Project

RBLC ID	Facility	County	State	Permit Date	Basis	Control	Limit (PPM	Notes
	CPV Valley Energy Center	Wawayanda	NY	NA	LAER		2.0	
	Caithness Long Island Energy	New York	NY	NA	LAER		2.0	
	Brockton Clean Energy	Brockton	MA	NA			2.0	
ID-0018	LANGLEY GULCH POWER PLANT	Payette	ID	06/25/2010	BACT-PSD	DLN, SCR	2.0	
TX-0600	THOMAS C. FERGUSON POWER PL	Llano	TX	9/1/2011	BACT-PSD	DLN, SCR	2.0	
*OR-0048	CARTY PLANT	Morrow	OR	12/29/2010	BACT-PSD	SCR	2.0	
TX-0590	KING POWER STATION	Harris	TX	8/5/2010	LAER	DLN, SCR	2.0	
TX-0552	WOLF HOLLOW POWER PLANT NO	Hood	TX	3/3/2010	BACT-PSD	DLN, SCR	2.0	
TX-0551	PANDA SHERMAN POWER STATIO	Grayson	TX	2/3/2010	BACT-PSD	DLN, SCR	2.0	Combined-cycle mode.
*TX-0548	MADISON BELL ENERGY CENTER	Madison	TX	8/18/2009	BACT-PSD	SCR	2.0	
*TX-0547	LAMAR POWER PARTNERS II LLC	Lamar	TX	6/22/2009	BACT-PSD	SCR	2.0	
*TX-0546	PATTILLO BRANCH POWER PLANT	Fannin	TX	6/17/2009	BACT-PSD	SCR	2.0	
NJ-0074	WEST DEPTFORD ENERGY	Gloucester	NJ	5/6/2009	LAER	SCR, Water injection	2.0	
FL-0303	FPL WEST COUNTY ENERGY CENT	Palm Beach	FL	7/30/2008	BACT-PSD	SCR	2.0	24-Hour standards
CT-0151	KLEEN ENERGY SYSTEMS, LLC	Middlesex	CT	2/25/2008	LAER	DLN, SCR	2.0	
*VA-0308	WARREN COUNTY FACILITY	Warren	VA	1/14/2008	BACT-PSD	Premix, SCR	2.0	
NY-0098	ATHENS GENERATING PLANT	Greene	NY	1/19/2007	LAER	DLN, SCR, ammonia i	2.0	
NY-0100	EMPIRE POWER PLANT	Rensselaer	NY	6/23/2005	LAER	DLN, SCR	2.0	3.0000 PPMVD AT 15% O2 with du
AZ-0043	DUKE ENERGY ARLINGTON VALLE	Maricopa	AZ	11/12/2003	BACT-PSD	SCR	2.0	
CA-1096	VERNON CITY LIGHT & POWER	Los Angeles	CA	5/27/2003	BACT-PSD	SCR, catalyst	2.0	
CA-1097	MAGNOLIA POWER PROJECT, SCP	Los Angeles	CA	5/27/2003	BACT-PSD	SCR, catalyst	2.0	
WA-0315	SUMAS ENERGY 2 GENERATION F	Whatcom	WA	4/17/2003	BACT-PSD	DLN, SCR	2.0	
NJ-0058	PSEG FOSSIL LLC LINDEN GENER	Union	NJ	8/24/2001	BACT-PSD	DLN, SCR	2.0	
WA-0302	GOLDENDALE ENERGY PROJECT	Klickitat	WA	2/23/2001	BACT-PSD	DLN, SCR	2.0	
NV-0034	LAS VEGAS COGENERATION FACI	Clark	NV	11/13/2000	BACT-PSD	SCR, ammonia injectic	2.0	
MA-0027	CABOT POWER CORPORATION	Suffolk	MA	5/7/2000	LAER	DLN, SCR	2.0	
GA-0138	LIVE OAKS POWER PLANT	Glynn	GA	4/8/2010	BACT-PSD	DLN, SCR	2.5	
MI-0366	BERRIEN ENERGY, LLC	Berrien	MI	4/13/2005	BACT-PSD	DLN, SCR	2.5	
OR-0039	COB ENERGY FACILITY, LLC	Klamath	OR	12/30/2003	BACT-PSD	DLN, SCR	2.5	
GA-0105	MCINTOSH COMBINED CYCLE FAC	Effingham	GA	4/17/2003	BACT-PSD	DLN, SCR	2.5	
WA-0291	WALLULA POWER PLANT	Walla Walla	WA	1/3/2003	Other	SCR	2.5	
NJ-0043	LIBERTY GENERATING STATION	Union	NJ	3/28/2002	Other	SCR	2.5	
WA-0288	LONGVIEW ENERGY DEVELOPMEN	Cowlitz	WA	9/4/2001	Other	SCR	2.5	
NJ-0059	COGEN TECHNOLOGIES LINDEN V	Union	NJ	5/9/2001	BACT-PSD	DLN, SCR, ammonia i	2.5	
NJ-0066	AES RED OAK LLC	Middlesex	NJ	2/16/2006	LAER	SCR	3.0	
GA-0102	WANSLEY COMBINED CYCLE ENE	Heard	GA	1/15/2002	BACT-PSD	DLN, SCR	3.0	
ID-0010	MIDDLETON FACILITY	Canyon	ID	10/19/2001	BACT-PSD	SCR, catalyst	3.0	3.5000 PPM @ 15% O2 W/ DB
*AK-0071	INTERNATIONAL STATION POWER	Anchorage	AK	12/20/2010	BACT-PSD	DLN, SCR	5.0	
LA-0136	PLAQUEMINE COGENERATION FA	Iberville	LA	7/23/2008	BACT-PSD	SCR	5.0	

RBLC Review for Large Combined Cycle Turbines - SO_2

Ocean Clean Energy Project

RBLC ID	Facility	County	State	Permit Date	Basis	Control	Limit (lb/MMBtu)	Notes
*VA-0308	WARREN COUNTY FACILITY	Warren	VA	1/14/2008	N/A	Good combustion practic	0.0003	
WA-0302	GOLDENDALE ENERGY PROJECT	Klickitat	WA	2/23/2001	BACT-PSD	Good combustion practic	0.0005	
OK-0129	CHOUTEAU POWER PLANT	Mayes	OK	1/23/2009			0.0006	1.06 lb/hr
WA-0288	LONGVIEW ENERGY DEVELOPMEN	Cowlitz	WA	9/4/2001	Other	Low sulfur fuel	0.0006	
NJ-0059	COGEN TECHNOLOGIES LINDEN V	Union	NJ	5/9/2001	Other	(N)	0.0010	
WA-0291	WALLULA POWER PLANT	Walla Walla	WA	1/3/2003	Other	Low sulfur fuel	0.0017	
MA-0027	CABOT POWER CORPORATION	Suffolk	MA	5/7/2000	BACT-PSD	Clean fuels	0.0022	
CT-0151	KLEEN ENERGY SYSTEMS, LLC	Middlesex	CT	2/25/2008	BACT-PSD	(N)	0.0023	4.9 lb/hr
WA-0315	SUMAS ENERGY 2 GENERATION F	Whatcom	WA	4/17/2003	BACT-PSD	Low sulfur fuel	0.0030	
ID-0010	MIDDLETON FACILITY	Canyon	ID	10/19/2001	BACT-PSD	Low sulfur fuel	0.0031	W/ DB
NJ-0043	LIBERTY GENERATING STATION	Union	NJ	3/28/2002	Other	Low sulfur fuel	0.0040	
NJ-0066	AES RED OAK LLC	Middlesex	NJ	2/16/2006	BACT-PSD	Clean fuels	0.0043	
LA-0136	PLAQUEMINE COGENERATION FA	Iberville	LA	7/23/2008	BACT-PSD	Clean fuels	0.0142	40.7000 LB/H
TX-0600	THOMAS C. FERGUSON POWER PL	Llano	TX	9/1/2011	BACT-PSD	Pipeline quality natural gas		27.07 LB/H
NJ-0074	WEST DEPTFORD ENERGY	Gloucester	NJ	5/6/2009	Other	Clean fuels		5.6600 LB/H
FL-0303	FPL WEST COUNTY ENERGY CENT	Palm Beach	FL	7/30/2008	BACT-PSD	Pipeline quality natural gas		2.0000 GR S/100 SCF
NJ-0058	PSEG FOSSIL LLC LINDEN GENER	Union	NJ	8/24/2001	BACT-PSD	(N)		2.0000 LB/H
NV-0034	LAS VEGAS COGENERATION FACI	Clark	NV	11/13/2000	BACT-PSD	Low sulfur fuel		0.3000 LB/H

RBLC Review for Large Combined Cycle Turbines - PM_{10}

Ocean Clean Energy Project

RBLC ID	Facility	County	State	Permit Date	Basis	Control	Limit (lb/MMBtu)	Notes
OK-0129	CHOUTEAU POWER PLANT	Mayes	OK	1/23/2009			0.0035	
CT-0151	KLEEN ENERGY SYSTEMS, LLC	Middlesex	CT	2/25/2008	BACT-PSD	(N)	0.0052	11 LB/HR W/O DB15.2000 LB/
	Caithness Long Island Energy	New York	NY	NA			0.0055	0.0066 W/ DB
OR-0039	COB ENERGY FACILITY, LLC	Klamath	OR	12/30/2003	BACT-PSD	Good combustion practices	0.0061	
NY-0100	EMPIRE POWER PLANT	Rensselaer	NY	6/23/2005			0.0063	
*AK-0071	INTERNATIONAL STATION POWER	Anchorage	AK	12/20/2010	BACT-PSD	Good combustion practices	0.0066	
	CPV Valley Energy Center	Wawayanda	NY	NA			0.0073	
WA-0291	WALLULA POWER PLANT	Walla Walla	WA	1/3/2003	LAER	Natural gas	0.0080	
GA-0105	MCINTOSH COMBINED CYCLE FAC	Effingham	GA	4/17/2003	BACT-PSD	Clean fuels, Good combustio	0.0090	
ID-0010	MIDDLETON FACILITY	Canyon	ID	10/19/2001	BACT-PSD	Pollution prevention	0.0093	0.00939 LB/MMBTU W/ DB
NJ-0074	WEST DEPTFORD ENERGY	Gloucester	NJ	5/6/2009	Other	Clean fuels	0.0094	18.6600 LB/H
AZ-0043	DUKE ENERGY ARLINGTON VALLE	Maricopa	AZ	11/12/2003	BACT-PSD	(N)	0.0097	0.01103 LB/MMBTU W/DB
GA-0102	WANSLEY COMBINED CYCLE ENER	Heard	GA	1/15/2002	BACT-PSD	Good combustion practices	0.0110	
LA-0224	ARSENAL HILL POWER PLANT	CADDO	LA	3/20/2008			0.0115	24.2 LB/HR
WA-0299	SUMAS ENERGY 2 GENERATION F	Whatcom	WA	9/6/2002	BACT-PSD	Good combustion practices	0.0115	
LA-0136	PLAQUEMINE COGENERATION FA	Iberville	LA	7/23/2008	BACT-PSD	Clean fuels	0.0116	33.5000 LB/H
MI-0366	BERRIEN ENERGY, LLC	Berrien	MI	4/13/2005	BACT-PSD	Good combustion practices	0.0120	19 LB/HR W/O DOB28.9 LB/H
MA-0027	CABOT POWER CORPORATION	Suffolk	MA	5/7/2000	BACT-PSD	Clean fuels	0.0120	
NJ-0058	PSEG FOSSIL LLC LINDEN GENER	Union	NJ	8/24/2001	BACT-PSD	(N)	0.0127	21.0000 LB/H
*VA-0308	WARREN COUNTY FACILITY	Warren	VA	1/14/2008	N/A	Good combustion practices	0.0130	
NJ-0066	AES RED OAK LLC	Middlesex	NJ	2/16/2006	BACT-PSD	Clean fuels	0.0135	
NJ-0043	LIBERTY GENERATING STATION	Union	NJ	3/28/2002	BACT-PSD	None	0.0150	0.0170 LB/MMBTU W/ DB
NJ-0059	COGEN TECHNOLOGIES LINDEN V	Union	NJ	5/9/2001	BACT-PSD	(N)	0.0260	
TX-0600	THOMAS C. FERGUSON POWER PL	Llano	TX	9/1/2011	BACT-PSD	Pipeline quality natural gas		33.43 LB/H
*OR-0048	CARTY PLANT	Morrow	OR	12/29/2010	BACT-PSD	Clean fuels		2.5 LB/MMCF
TX-0590	KING POWER STATION	Harris	TX	8/5/2010	BACT-PSD	Low ash fuel		11.1 LB/HR
WA-0288	LONGVIEW ENERGY DEVELOPMEN	Cowlitz	WA	9/4/2001	Other	Good combustion practices		10 lb/hr

0	Brockton Clean Energy	Brockton	MA	NA			0.0055	0.0066 LB/MMBTU W/
NY-0100	EMPIRE POWER PLANT	Rensselaer	NY	6/23/2005			0.0063	
*AK-0071	INTERNATIONAL STATION POWER	Anchorage	AK	12/20/2010	BACT-PSD	Good combustion practices	0.0066	
0	Caithness Long Island Energy	New York	NY	NA			0.0073	0.0062 LB/MMBTU W/
TX-0600	THOMAS C. FERGUSON POWER PI	Llano	TX	9/1/2011	BACT-PSD	Pipeline quality natural gas		33.43 LB/H
TX-0590	KING POWER STATION	Harris	TX	8/5/2010	BACT-PSD	Low ash fuel		11.1 LB/HR
NJ-0074	WEST DEPTFORD ENERGY	Gloucester	NJ	5/6/2009	Other	Clean fuels		18.6600 LB/H

RBLC Review for Large Combined Cycle Turbines - VOC

Ocean Clean Energy Project

RBLC ID	Facility	County	State	Permit Date	Basis	Control	Limit (PPM)	Notes
	CPV Valley Energy Center	Wawayanda	NY	NA	LAER		0.7	1.8 PPM W/ DB
*VA-0308	WARREN COUNTY FACILITY	Warren	VA	1/14/2008	N/A	Oxidation catalyst	0.7	1.0000 PPMVD WITH DUCT BURNER, 1.4000 PPMVD WITH DUCT BURNER AND POWER AUGMENTATION
NY-0100	EMPIRE POWER PLANT	Rensselaer	NY	6/23/2005	LAER	Oxidation catalyst	1.0	7.0000 PPMDV AT 15 % O2 with duct burning
NJ-0043	LIBERTY GENERATING STATION	Union	NJ	3/28/2002	Other	CO Catalyst	1.0	1.7000 PPMVD @ 15% O2 with duct burner
MA-0027	CABOT POWER CORPORATION	Suffolk	MA	5/7/2000	BACT-PSD	Oxidation catalyst	1.0	
FL-0303	FPL WEST COUNTY ENERGY CENT	Palm Beach	FL	7/30/2008	BACT-PSD	(N)	1.2	
NJ-0059	COGEN TECHNOLOGIES LINDEN V	Union	NJ	5/9/2001	Other	(N)	1.2	
MI-0366	BERRIEN ENERGY, LLC	Berrien	MI	4/13/2005	BACT-PSD	Oxidation catalyst	1.6	16 LB/H W/ DUCT BURNING
TX-0590	KING POWER STATION	Harris	TX	8/5/2010	LAER	DLN, oxidation catalyst	1.8	
ID-0010	MIDDLETON FACILITY	Canyon	ID	10/19/2001	BACT-PSD	None	1.8	3.8 PPM W/ DB
NJ-0074	WEST DEPTFORD ENERGY	Gloucester	NJ	5/6/2009	LAER	Oxidation catalyst, Good combusti	1.9	
WA-0288	LONGVIEW ENERGY DEVELOPMEN	Cowlitz	WA	9/4/2001	Other	Good combustion practices	1.9	
ID-0018	LANGLEY GULCH POWER PLANT	Payette	ID	06/25/2010	BACT-PSD	Oxidation catalyst	2.0	
TX-0600	THOMAS C. FERGUSON POWER PL	Llano	TX	9/1/2011	BACT-PSD	Oxidation catalyst	2.0	
GA-0138	LIVE OAKS POWER PLANT	Glynn	GA	4/8/2010	BACT-PSD	Oxidation catalyst	2.0	
*TX-0546	PATTILLO BRANCH POWER PLANT	Fannin	TX	6/17/2009	BACT-PSD	Oxidation catalyst	2.0	
CA-1096	VERNON CITY LIGHT & POWER	Los Angeles	CA	5/27/2003	BACT-PSD	SCR, Oxidation catalyst	2.0	
GA-0105	MCINTOSH COMBINED CYCLE FAC	Effingham	GA	4/17/2003	BACT-PSD	Oxidation catalyst	2.0	
GA-0102	WANSLEY COMBINED CYCLE ENER	Heard	GA	1/15/2002	BACT-PSD	Good combustion practices	2.0	
OR-0039	COB ENERGY FACILITY, LLC	Klamath	OR	12/30/2003	BACT-PSD	Oxidation catalyst, Good combusti	2.4	
*TX-0548	MADISON BELL ENERGY CENTER	Madison	TX	8/18/2009	BACT-PSD	Good combustion practices	2.5	
TX-0552	WOLF HOLLOW POWER PLANT NO	Hood	TX	3/3/2010	BACT-PSD	DLN, SCR	3.0	GE7FA
NJ-0066	AES RED OAK LLC	Middlesex	NJ	2/16/2006	LAER	Oxidation catalyst	3.0	
TX-0551	PANDA SHERMAN POWER STATIO	Grayson	TX	2/3/2010	BACT-PSD	DLN, SCR	4.0	Combined-cycle mode.
*TX-0547	LAMAR POWER PARTNERS II LLC	Lamar	TX	6/22/2009	BACT-PSD	Good combustion practices	4.0	
NY-0098	ATHENS GENERATING PLANT	Greene	NY	1/19/2007	LAER	Good combustion practices	4.0	
AZ-0043	DUKE ENERGY ARLINGTON VALLE	Maricopa	AZ	11/12/2003	BACT-PSD	(N)	4.0	
CT-0151	KLEEN ENERGY SYSTEMS, LLC	Middlesex	CT	2/25/2008	BACT-PSD	(N)	5.0	
WA-0291	WALLULA POWER PLANT	Walla Walla	WA	1/3/2003	Other	Good combustion practices	5.0	
WA-0315	SUMAS ENERGY 2 GENERATION F	Whatcom	WA	4/17/2003	BACT-PSD	Good combustion practices	5.2	
WA-0302	GOLDENDALE ENERGY PROJECT	Klickitat	WA	2/23/2001	BACT-PSD	Oxidation catalyst, Good combusti	6.0	
	Caithness Long Island Energy	New York	NY	NA				3.5 LB/H; 6.1 LB/H W/ DB
	Brockton Clean Energy	Brockton	MA	NA				1.0 LB/H; 2.5 LB/H W/ DB
NJ-0058	PSEG FOSSIL LLC LINDEN GENER	Union	NJ	8/24/2001	LAER	Oxidation catalyst		2.1000 LB/H
NV-0034	LAS VEGAS COGENERATION FACI	Clark	NV	11/13/2000	BACT-PSD	Oxidation catalyst		2.0000 LB/H

RBLC Review for Large Combined Cycle Turbines - H_2SO_4

Ocean Clean Energy Project

RBLC ID	Facility	County	State	Permit Date	Basis	Control	Limit (lb/MMBtu)	Notes
*VA-0308	WARREN COUNTY FACILITY	Warren	VA	1/14/2008	N/A	Good combustion practices	0.00010	
WA-0302	GOLDENDALE ENERGY PROJECT	Klickitat	WA	2/23/2001	Other	Good combustion practices	0.00010	
WA-0315	SUMAS ENERGY 2 GENERATION F	Whatcom	WA	4/17/2003	BACT-PSD	Low sulfur fuel	0.00062	
WA-0291	WALLULA POWER PLANT	Walla Walla	WA	1/3/2003	Other	Natural gas	0.00073	
NJ-0043	LIBERTY GENERATING STATION	Union	NJ	3/28/2002	Other	None	0.00243	
NJ-0066	AES RED OAK LLC	Middlesex	NJ	2/16/2006	BACT-PSD	Low sulfur fuel	0.00270	
TX-0600	THOMAS C. FERGUSON POWER PI	Llano	TX	9/1/2011	BACT-PSD	Pipeline quality natural gas		13.68 LB/H